C	=	975 N
C_0	=	305 N
P_u	=	14 N
Mass	≈	0.0031 Kg

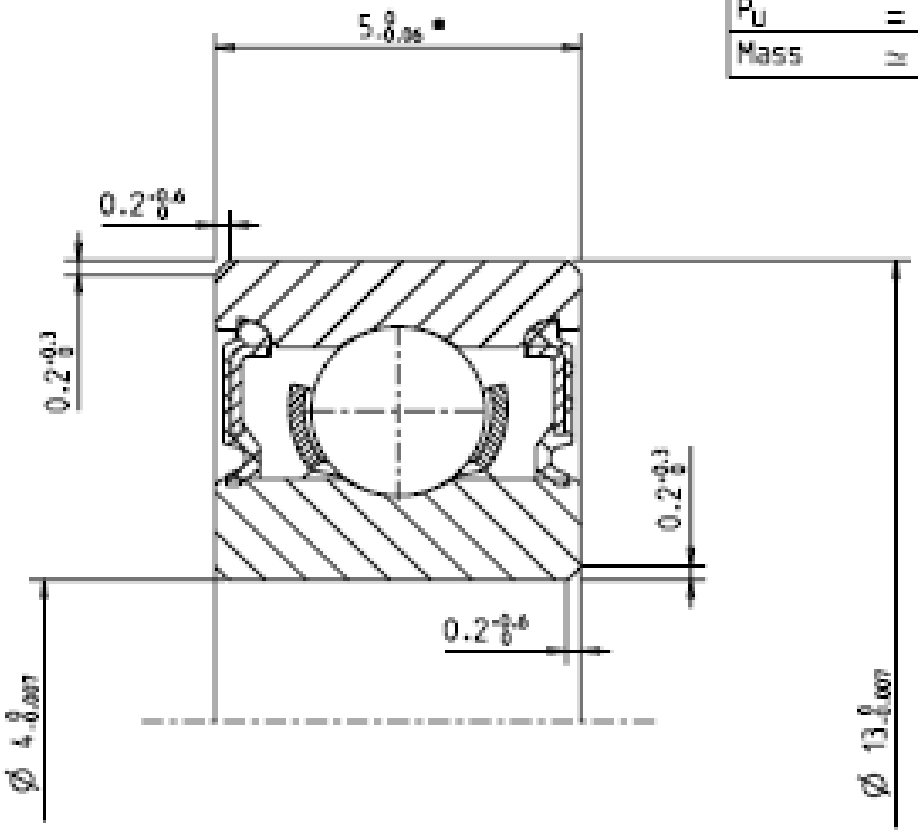

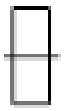

1:1

Cage type
Pressed steel

Radial clearance (CN) (Without measuring load)	0.002 min. 0.013 max.
Grease type	MT47
Grease fill	Normal

Seal material
Steel sheet and NBR

Tolerances in accordance with ISO 492, tolerance class 6, except *

Deep groove ball bearing
SKF EXPLORER

Product Designation
624-2RS1