X20CM0985

1 General information

The module has a compact size and combines a power measurement module that has special features with a synchronization unit that is able to meet all demands.

The measurement unit's 3 current inputs are suitable for both X: 1 A and X: 5 A current transformers. Overcurrent resistance and the high resolution of the measurement unit round off its features. For the voltage inputs, the value range can be configured between 480 VAC and 120 VAC.

The area of use includes 4-wire AC networks with a phase voltage up to 480 VAC and 3-wire systems, whereas L2 can be grounded (V-connection). The module can also handle Aron measuring circuits.

The resulting measured values include the pure phase current; line-to-line voltage or phase voltage; the effective, reactive and apparent power parts; the mains frequency; the power factor and much more. In addition, peak values and energy meters are stored on the module in nonvolatile memory. Depending on the configuration, it is also possible to use a digital output as a pulse encoder for an external energy meter.

The synchronization unit doesn't just take the phasing and phase voltage into consideration; integrated intelligence also monitors the rate of change and other parameters, allowing them to influence when the synchronization output is switched. It is also possible to monitor a generator using a large number of additional conditions. A total of 4 voltage inputs provide substantial overall flexibility.

Monitoring functions expand the features of the module. Dependent overcurrent monitoring is included, which utilizes the thermal capacity of the motor/generator to allow short overloads while still providing full protection. The dependent, delayed imbalanced load monitoring used to protect three-phase generator and three-phase networks from imbalanced load can be adapted to the characteristics of different generator types using parameters while taking their special thermal time constants into account.

- Energy measurement for 120 to 480 VAC
- Simultaneous measurement of 2 AC mains networks plus 2 additional voltages
- For multifunctional measurement tasks
- Intelligent mains synchronization unit

Information:

Please refer to section "Safety guidelines" on page 5 before operating the module.

1.1 Other applicable documents

For additional and supplementary information, see the following documents.

Other applicable documents

Document name	Title
MAX20	X20 system user's manual
MAEMV	Installation / EMC guide

2 Order data

Order number	Short description	Figure
	Other functions	
X20CM0985	X20 digital and analog mixed module, multi-measurement transducer/ synchronization module, 5 digital outputs, 24 VDC, 0.5 A source, 1 relay, 1 A, changeover contact, 8 analog inputs, ±480 V / 120 V, 16-bit converter resolution, 3 analog inputs 5 A / 1 A AC, 16-bit converter resolution, order terminal blocks 0TB3102-7011, 0TB3104-7011, 0TB3102-7012, 0TB3104-7012 and 2x TB12 separately.	
	Required accessories	
	Terminal blocks	
0TB3102-7011	Accessory terminal block, 2-pin, A keyed, screw clamp terminal block 6 mm²	
0TB3102-7012	Accessory terminal block, 2-pin, B keyed, screw clamp terminal block 6 mm²	
0TB3104-7011	Accessory terminal block, 4-pin, A keyed, screw clamp terminal block 6 mm²	
0TB3104-7012	Accessory terminal block, 4-pin, B keyed, screw clamp terminal block 6 mm²	
X20TB12	X20 terminal block, 12-pin, 24 VDC keyed	

Table 1: X20CM0985 - Order data

3 Technical description

3.1 Technical data

Order number	X20CM0985
Short description	
I/O module	X20 energy measurement and synchronization module
General information	
B&R ID code	0x2433
Status indicators	Channel status, operating state, module status
Diagnostics	
Module run/error	Yes, using LED status indicator and software
Analog inputs	Yes, using LED status indicator (measurement range of analog inputs)
Digital outputs	Yes, using LED status indicator and software
Overvoltage category	II [1)]
Power consumption	
Bus	1.4 W
Internal I/O	4 W
Additional power dissipation caused by actuators (resistive) [W]	-
Certifications	
CE	Yes
ATEX	Zone 2, II 3G Ex nA nC IIA T5 Gc IP20, Ta (see X20 user's manual) FTZÚ 09 ATEX 0083X
UL	cULus E115267 Industrial control equipment
HazLoc	cCSAus 244665 Process control equipment for hazardous locations Class I, Division 2, Groups ABCD, T5
EAC	Yes
KC	Yes
Digital outputs	
Quantity	5
Variant	Current-sourcing FET
Nominal voltage	24 VDC
Switching voltage	24 VDC -15% / +20%
Nominal output current	0.1 A
Total nominal current	0.5 A
Connection type	1-wire connections
Output circuit	Source
Output protection	Thermal shutdown in the event of overcurrent or short circuit
Diagnostic status	Output monitoring with 10 ms delay
Leakage current when the output is switched off	5 µA
Residual voltage	<0.3 V at 0.1 A nominal current
Peak short-circuit current	<2 A
Switch-on in the event of overload shutdown or short-circuit shutdown	Approx. 10 ms, depends on the module temperature

Table 2: X20CM0985 - Technical data

Order number	X20CM0985
Switching delay	
0 → 1	<300 µs
1 → 0	<300 µs
Switching frequency	
Resistive load	Max. 100 Hz
Insulation voltage between channel and bus	500 V_{eff}
Relay outputs	
Quantity	1
Variant	Relay / Changeover contact
Nominal voltage	30 VDC / 240 VAC
Rated frequency	DC / 45 to 63 Hz
Switching capacity	
Min.	10 mA / 5 VDC
Max.	30 W / 240 VAC
Nominal output current	1 A at 30 VDC / 1 A at 240 VAC
Actuator power supply	External
Switching voltage	Max. 60 VDC / 250 VAC
Switching delay	
0 → 1	≤10 ms
1 → 0	≤10 ms
Service life [2)]	
Mechanical	Min. 10 x 10^6 ops.
Electrical	Min. 60 x 10^3 ops. (NC) at 1 A Min. 30 x 10^3 ops. (NO) at 1 A
Contact resistance	Max. 100 mΩ
Protective circuit	
Internal	None
External	None
DC	Inverse diode, RC combination or VDR
AC	RC combination or VDR
Insulation voltage	
Channel - Channel	1000 VAC / 1 min
Channel - Bus	4000 VAC / 1 min
Analog input voltage	
Channels	8
Input	120 VAC / 480 VAC
Input type	Single-ended
Digital converter resolution	±15-bit
Conversion time	
50 Hz	20 ms
60 Hz	16.67 ms
Permissible input signal	Max. 132 VAC / 528 VAC
Output format [3)]	
±120 VAC	1 LSB = 0x0001 = 5.707 mV
±480 VAC	1 LSB = 0x0001 = 22.787 mV
Output of digital value during overload	
Overshoot	0x7FFF
Undershoot	0x8001
Conversion method	SAR
Input filter	
Cutoff frequency	10 kHz
Slope	60 dB
Maximum gain drift [4)]	0.02% per °C
Maximum offset drift [5)]	0.003% per °C
Crosstalk between channels	-70 dB
Nonlinearity [5)]	≤0.5% at 45 to 65 Hz
Protection against electrical shock	Protective impedance per EN 61131-2
Test voltage between channel and bus (type test)	3700 V_{eff}
Output format	INT
Input impedance in signal range	Approx. 3 MΩ
Max. error at 25°C	
Gain	0.09% [4)]
Offset	0.03% [5)]
Input protection	Overvoltage protection
Analog input current	
Channels	3
Input	1 A / 5 A AC
Input type	Isolated current transformer according to the compensation principle with a magnetic sensor, for connecting an external transformer
Digital converter resolution	±15-bit
Conversion time	
50 Hz	20 ms
60 Hz	16.67 ms

Table 2: X20CM0985 - Technical data

Order number	X20CM0985
Permissible input signal	Max. 1.5 A / 7.7 A
Output format [3]	
±1 A	1 LSB = 0x0001 = 189.903 µA
±5 A	1 LSB = 0x0001 = 949.513 µA
Output of digital value during overload	
Overshoot	0x7FFF
Undershoot	0x8001
Conversion method	SAR
Input filter	
Cutoff frequency	10 kHz
Slope	60 dB
Maximum gain drift [4]	0.07% per °C
Maximum offset drift [6]	0.003% per °C
Crosstalk between channels	-70 dB
Nonlinearity [6]	≤0.5% at 45 to 65 Hz
Insulation voltage between channel and bus	500 V_{eff}
Output format	INT
Max. error at 25°C	
Gain	0.2% [4]
Offset	0.05% [6]
Thermal overcurrent	15 x I_{Nom} for 0.2 s [7]
Monitored overcurrent	4 x I_{Nom} [7]
Input impedance [8]	
Measurement range 1 A	Max. 30 mΩ
Measurement range 5 A	Max. 10 mΩ
Electrical properties	
Electrical isolation	Bus isolated from I/O power supply and digital inputs and outputs Digital inputs and outputs isolated from each other
Operating conditions	
Mounting orientation	
Horizontal	Yes
Vertical	Yes
Installation elevation above sea level	
0 to 2000 m	No limitation
>2000 m	Reduction of ambient temperature by 0.5°C per 100 m
Degree of protection per EN 60529	IP20
Ambient conditions	
Temperature	
Operation	
Horizontal mounting orientation	0 to 60°C
Vertical mounting orientation	0 to 50°C
Derating	See section "Derating".
Storage	-40 to 85°C
Transport	-40 to 85°C
Relative humidity	
Operation	5 to 95%, non-condensing
Storage	5 to 95%, non-condensing
Transport	5 to 95%, non-condensing
Mechanical properties	
Note	Order 2x terminal block X20TB12 separately. Order 2x screw clamp terminal block TB3102 and 2x screw clamp terminal block TB3104 separately.
Pitch	$87.5^{+0.2}$ mm

Table 2: X20CM0985 - Technical data

1) EN 61131-2
2) See section "Electrical service life".
3) INT, range of values: 0x8001 to 0x7FFF
4) Based on the current measured value
5) Based on the measurement range 240 VAC / 960 VAC
6) Based on the measurement range 2 A / 10 A
7) Based on the measurement range 1 A / 5 A
8) Including current transformer, circuit path and X20TB12 terminal block (5 mΩ)

3.2 Safety guidelines

General information

Programmable logic controllers, operating/monitoring devices (e.g. industrial PCs, Power Panels, Mobile Panels, etc.) as well as uninterruptible power supplies have all been designed, developed and manufactured by B&R for conventional use or for use with increased safety requirements (safety technology) in industry. They were not designed, developed and manufactured for any use involving serious risks or hazards that could lead to death, injury, serious physical damage or loss of any kind without the implementation of exceptionally stringent safety precautions. In particular, such risks and hazards include the use of these devices to monitor nuclear reactions in nuclear power plants, their use in flight control or flight safety systems as well as in the control of mass transportation systems, medical life support systems or weapons systems.

When using programmable logic controllers or operating/monitoring devices as control systems together with a Soft PLC (e.g. B&R Automation Runtime or comparable product) or Slot PLC (e.g. B&R LS251 comparable product), safety precautions relevant to industrial control systems (e.g. the provision of safety devices such as emergency stop circuits, etc.) must be observed in accordance with applicable national and international regulations. The same applies for all other devices connected to the system, e.g. drives.

All tasks such as the installation, commissioning and servicing of devices are only permitted to be carried out by qualified personnel. Qualified personnel are those familiar with the transport, mounting, installation, commissioning and operation of devices who also have the appropriate qualifications (e.g. IEC 60364-1). National accident prevention regulations must be observed.

The safety notices, connection descriptions (type plate and documentation) and limit values listed in the technical data are to be read carefully before installation and commissioning and must be observed.

Intended use

Danger!

Electronic devices are never completely failsafe. If the multi-measurement and synchronization unit fails, the user is responsible for making sure that the motor or generator is brought to a secure state.

Some errors are detected and prevented in the synchronization unit by the system's internal software monitoring. However, when the device is in operation it is always possible for errors, defective components, software errors or configuration mistakes to occur at any time. B&R emphasizes that the multi-measurement and synchronization unit possesses neither a failsafe function nor a redundancy system. For this reason, independent higher-level safety precautions need to be put in place to ensure that personnel and machines are protected.

Grounding the Mounting Rail

For grounding purposes, a good conductive connection between the mounting rail and the metal back wall is required. The mounting rail is to be connected conductively to the back wall. This is achieved by inserting a contact washer with the fastening screw.

Information:

The control cabinet back wall must be connected with GND

3.3 LED status indicators

For a description of the various operating modes, see section "Additional information - Diagnostic LEDs" in the X20 system user's manual.

LED status indicators - Right

Figure	LED	Color	Status	Description
	r	Green	Off	No power to module
			Single flash	RESET mode
			Double flash	BOOT mode (during firmware update)[1)]
			Blinking	PREOPERATIONAL mode
			On	RUN mode
	e	Red	Off	No power to module or everything OK
			On	Error or reset status
	e + r	Red on / Green single flash		Invalid firmware
	1 - 6	Orange		Output status of the corresponding digital output

1) Depending on the configuration, a firmware update can take up to several minutes.

Status-LEDs right

Figure	LED[1)]	Terminal	Color	Status	Description
	1	X3	Green	On	Measurement range: 120 VAC
			Red	On	Measurement range: 480 VAC
	2	X4	Green	On	Measurement range: 120 VAC
			Red	On	Measurement range: 480 VAC
	3	X5	Green	On	Measurement range: 120 VAC
			Red	On	Measurement range: 480 VAC
	4	X6	Green	On	Measurement range: 120 VAC
			Red	On	Measurement range: 480 VAC
	5	X2	Green	On	Measurement range: 1 A
			Red	On	Measurement range: 5 A

1) LEDs 1 - 5 are green/red dual LEDs.

3.4 Connection elements

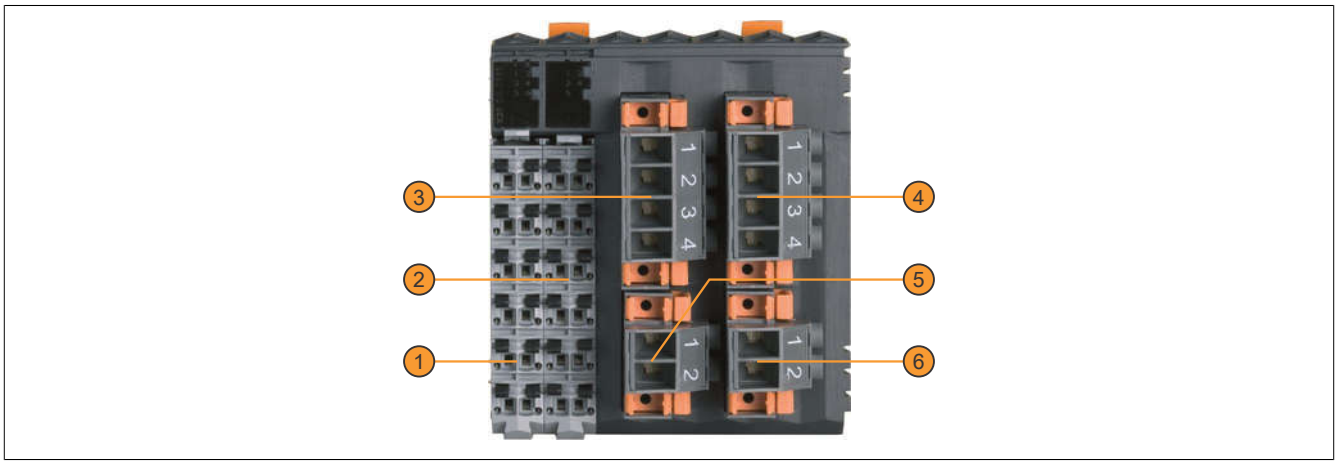

1	Digital outputs X1	2	Analog current inputs X2 (generator network)
3	Analog voltage inputs X3 (generator network)	4	Analog voltage inputs X5 (busbar)
5	Analog voltage inputs X4 (synchronization network 1)	6	Analog voltage inputs X6 (synchronization network 2)

3.5 Digital outputs X1

The X1 and X2 terminals can each be keyed differently to prevent them from being inadvertently plugged into the module incorrectly.

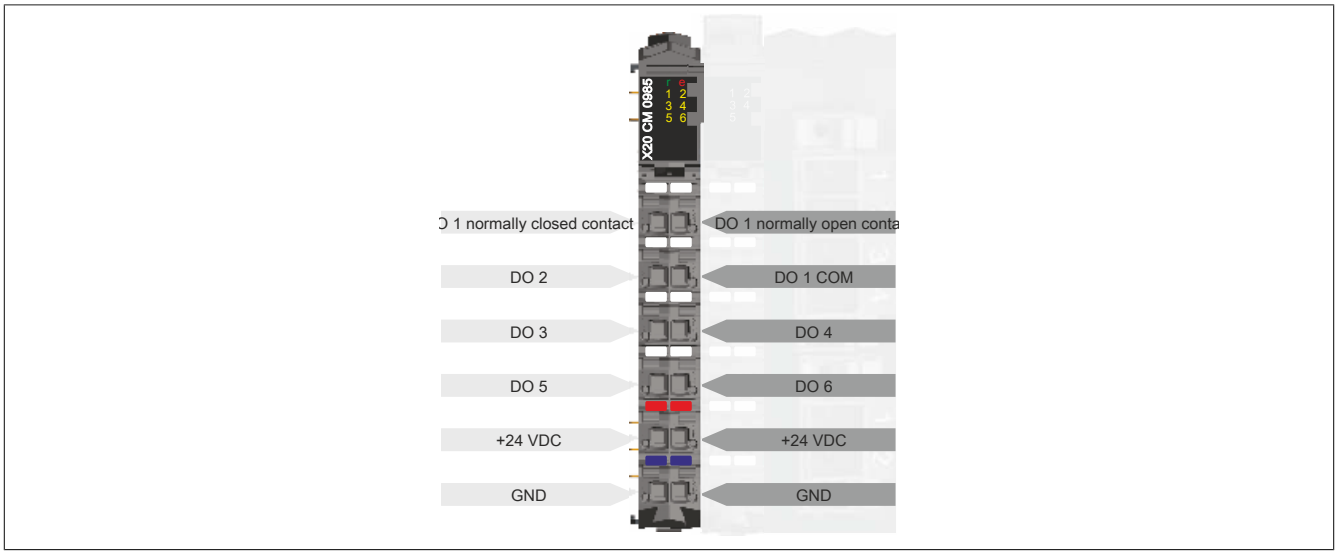

Function description of the digital outputs

Digital output	Description
DO1	This digital output is designed as a changeover contact switch. The monitoring relay allows selective monitoring of: • Overvoltage and undervoltage • Overfrequency and underfrequency • Voltage asymmetry • Current asymmetry • Calculated neutral conductor current (maximum) • Short circuit current • Dependent overcurrent • Limit value of the capacitive reactive power (exciter failure)
DO2	DO2 serves as a meter output. The generated pulses can be recorded by an external energy meter (kWh).
DO3	This output is set when there is no voltage on the bus bar (below the lower limit of the defined parameter). 3-phase monitoring takes place for the bus bar voltage.
DO4	DO4 serves as a synchronization pulse. The power switch is activated by setting this output. The output is deactivated after the configured time has elapsed (exception: "Synchro check" operating mode).
DO5 and DO6	These outputs are freely available to the user.

DO1 - Output circuit diagram

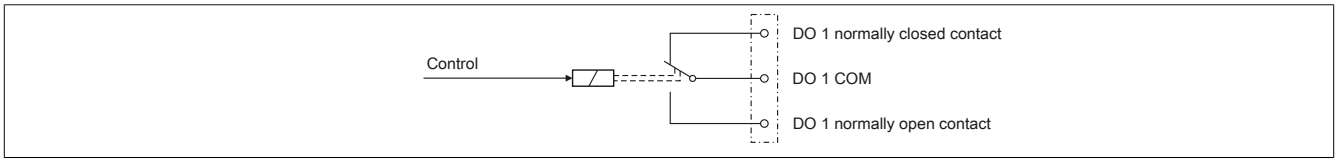

DO2 - DO 6 - Output circuit diagram

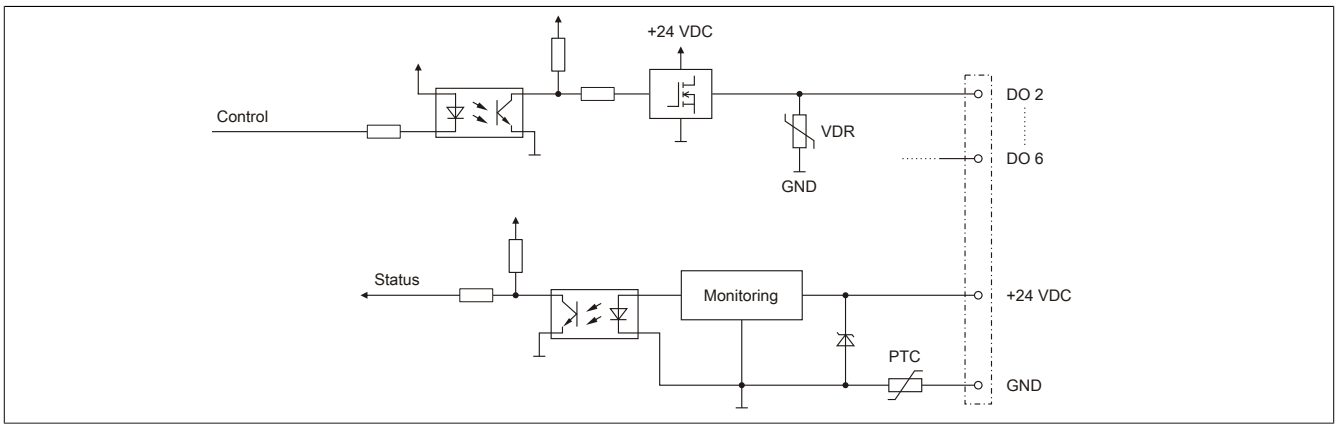

3.6 X2 analog current inputs

The X2 terminal measures the three phase currents of the generator mains using an externally connected current transformer. The measurement range of the current inputs can be configured as 1 A or 5 A.

Terminals X1 and X2 can be keyed differently to prevent unintentional incorrect connection on the module.

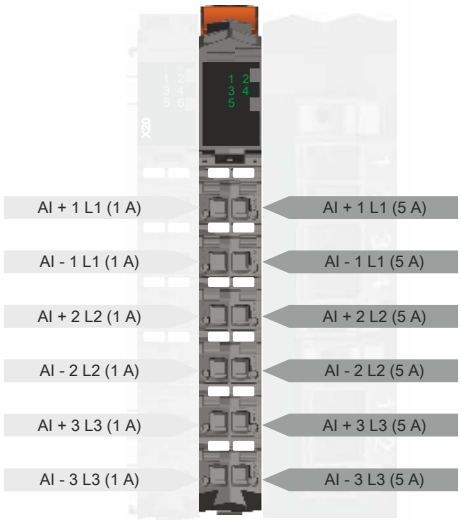

Danger!

Risk of electric shock!

The terminal block must only be allowed to conduct voltage when it is inserted. It must not under any circumstances be removed or inserted when voltage is applied or have voltage applied to it when it is removed.

Input circuit diagram - Analog current inputs

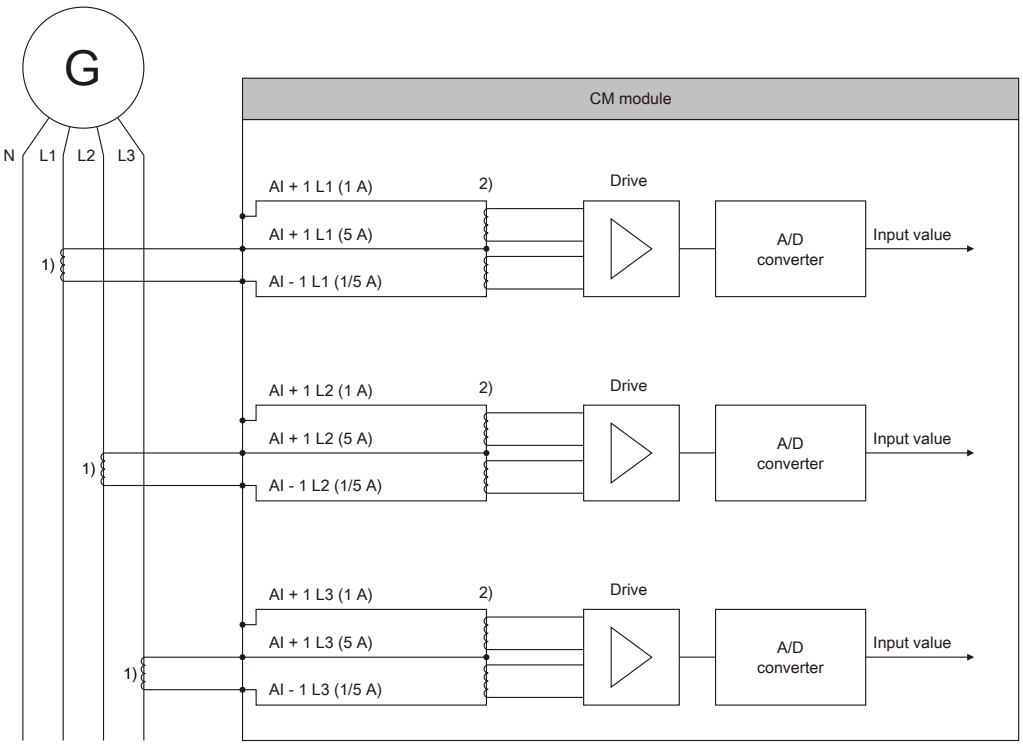

1) External current transformers
2) Internal current transformers

3.7 X3 and X5 analog voltage inputs

The X3 and X5 terminals are used to measure and monitor the line-to-line and phase voltages of the generator mains and bus bar.

- Terminal X3: Generator mains
- Terminal X5: Bus bar

Terminals X3 and X5 are keyed differently to prevent unintentional incorrect connection on the module. Section "Releasing the locking clip for terminals X3 - X6" on page 15 describes how to release the terminal locking clip.

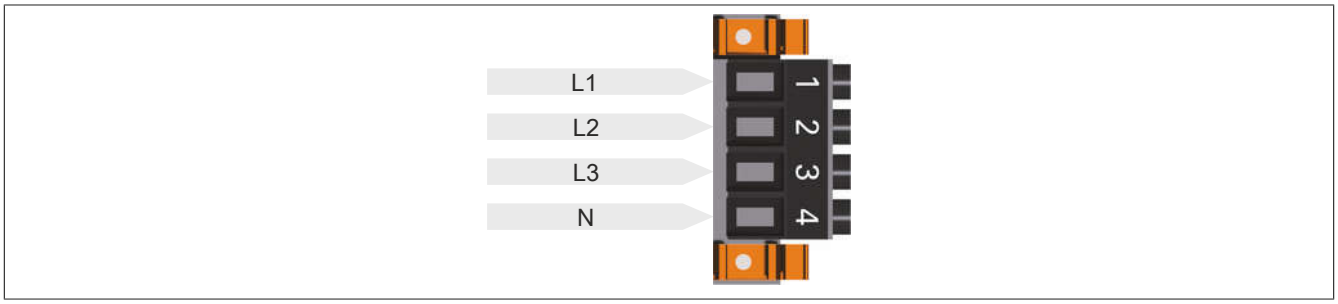

3.8 X4 and X6 analog voltage inputs

The voltage inputs on the X4 and X6 terminals are used to determine the line-to-line voltages for synchronization between two different mains networks.

- Terminal X4: Synchronization mains network 1
- Terminal X6: Synchronization mains network 2

The X4 and X6 terminals are each keyed differently to prevent them from being inadvertently plugged into the module incorrectly. Section "Releasing the locking clip for terminals X3 - X6" on page 15 describes how to release the terminal locking clip.

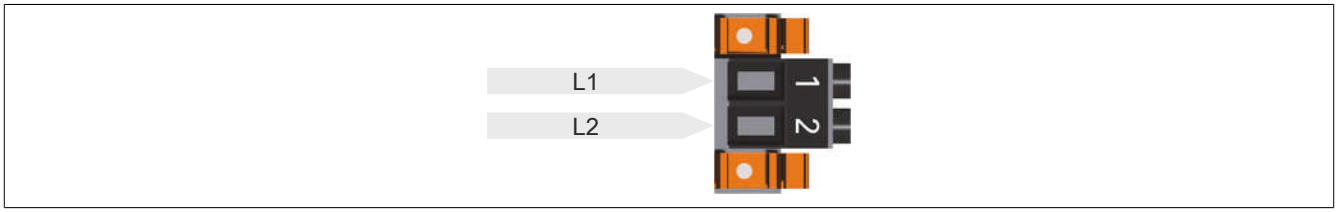

Input circuit diagram, analog voltage inputs

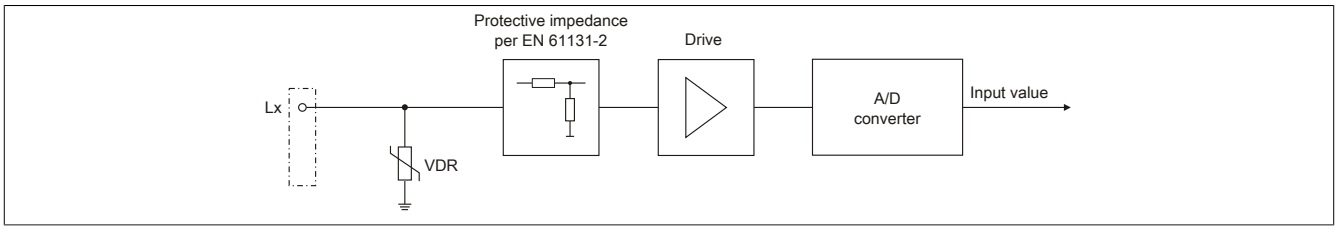

3.9 Circuit diagram

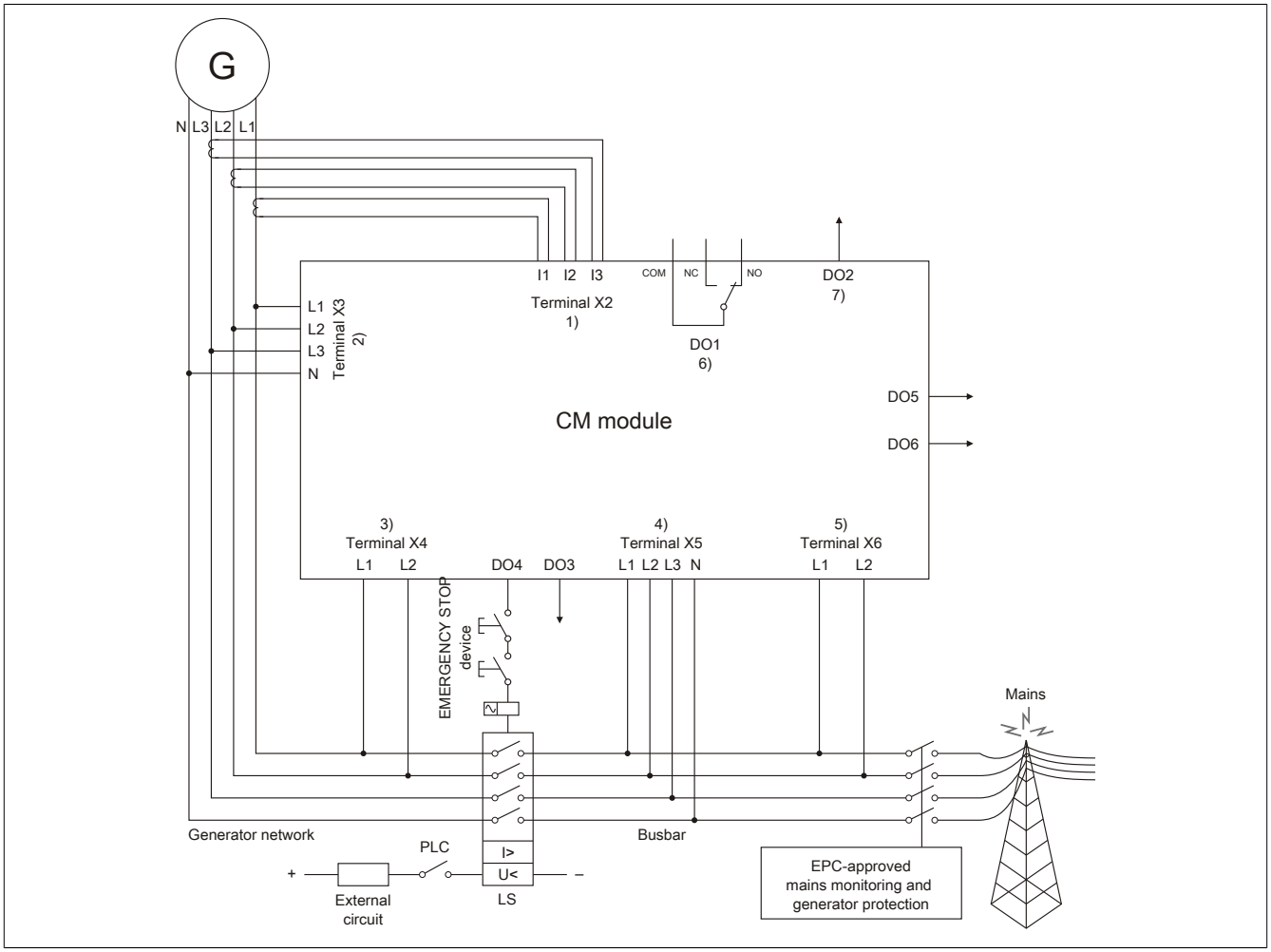

1) **Terminal X2:** Current inputs for generator network 5 A / 1 A
2) **Terminal X3:** Generator network 480 VAC / 120 VAC
3) **Terminal X4:** Synchronization network 1 480 VAC / 120 VAC
4) **Terminal X5:** Busbar network 480 VAC / 120 VAC
5) **Terminal X6:** Synchronization network 2 480 VAC / 120 VAC
6) **DO1:** Monitoring relay
7) **DO2:** Generator energy, pulse = x * kWh

3.10 Typical connection examples for voltage/current measurement

For power measurement, the X3 terminal must always be used in connection with the X2 terminal! For single-phase measurement, always ensure that current input 1 is used for power measurement if voltage input 1 is being used. Otherwise, accurate power measurement is not possible for this phase!

Connection example 1

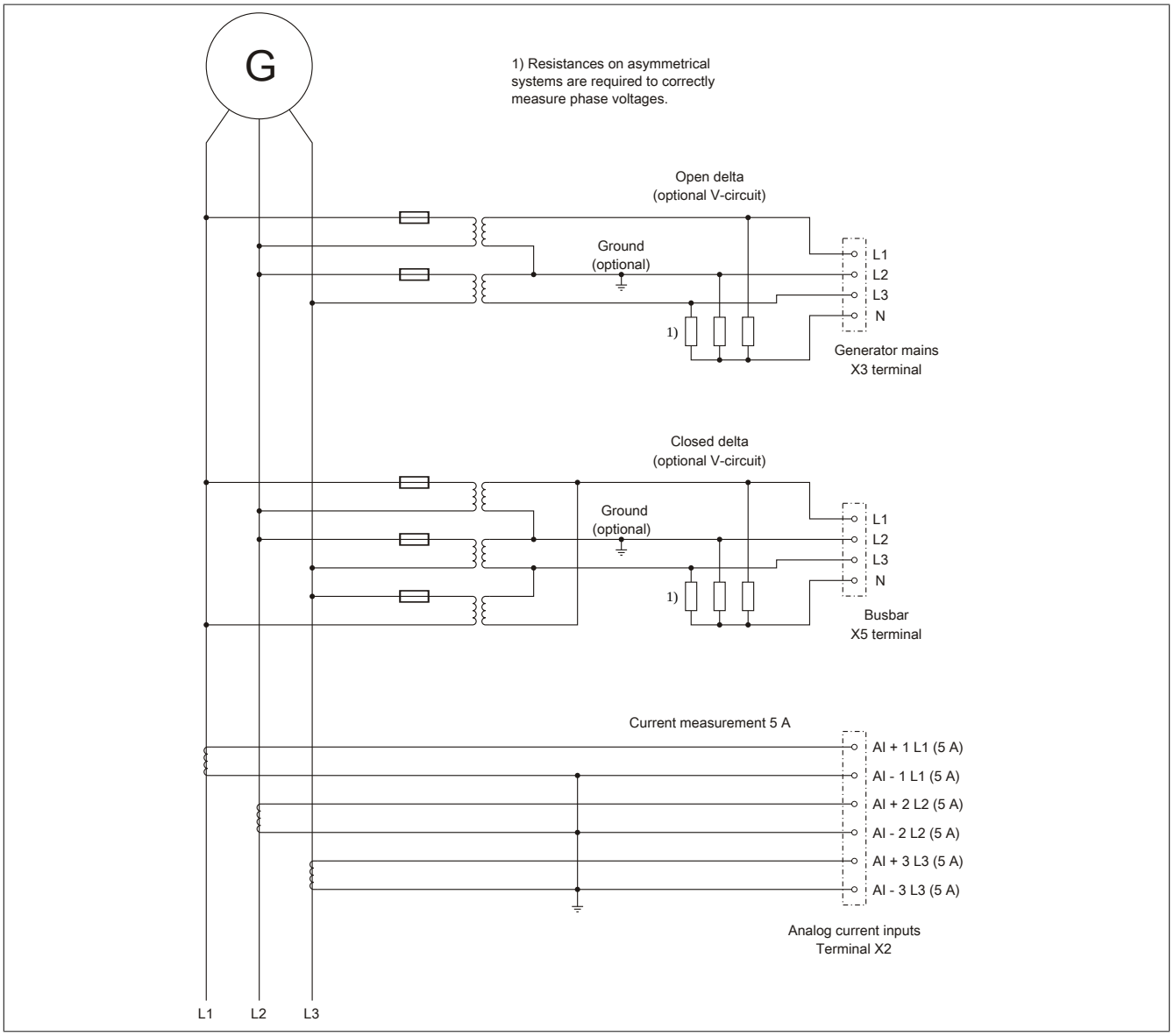

Connection example 2

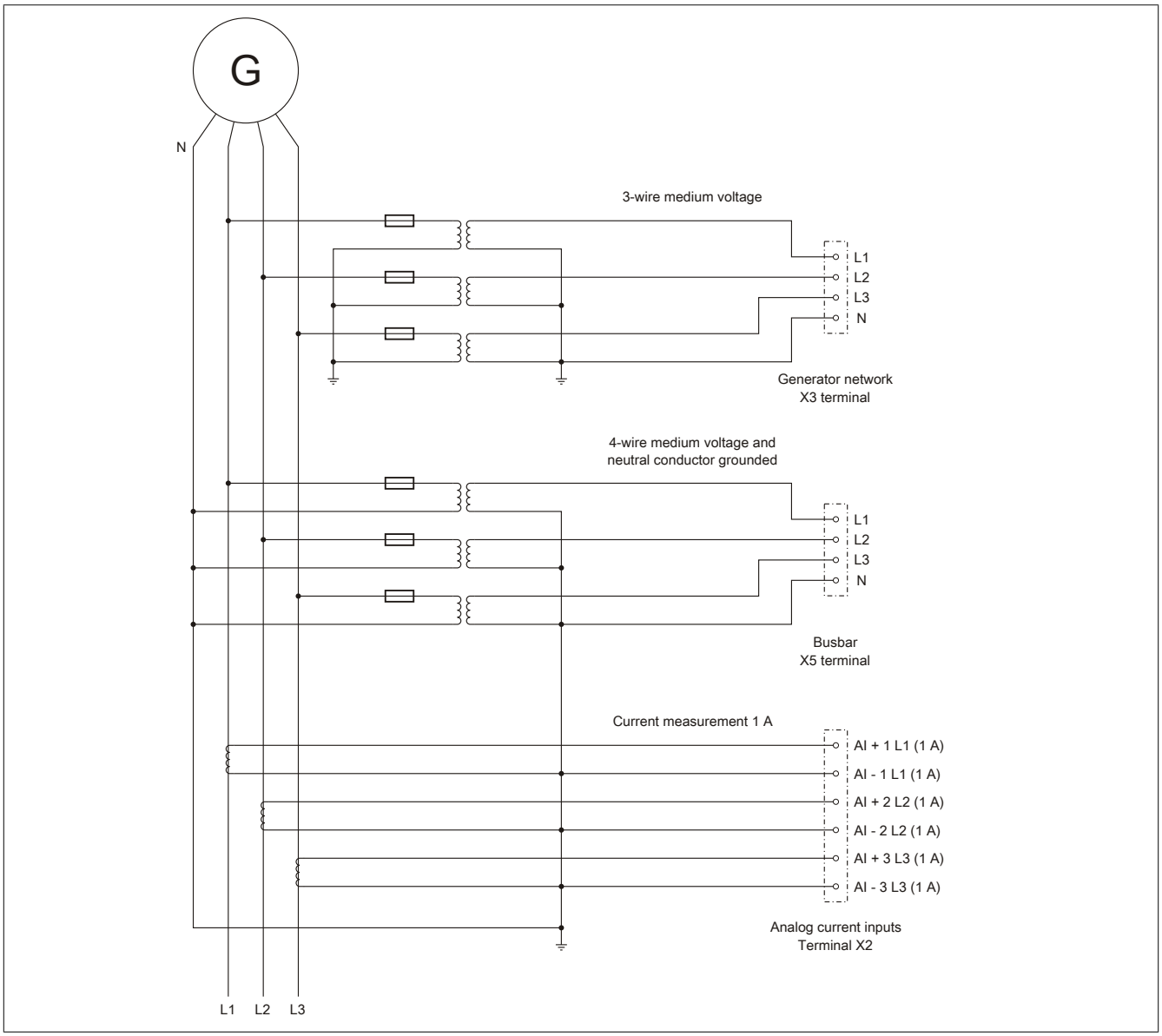

Connection example 3

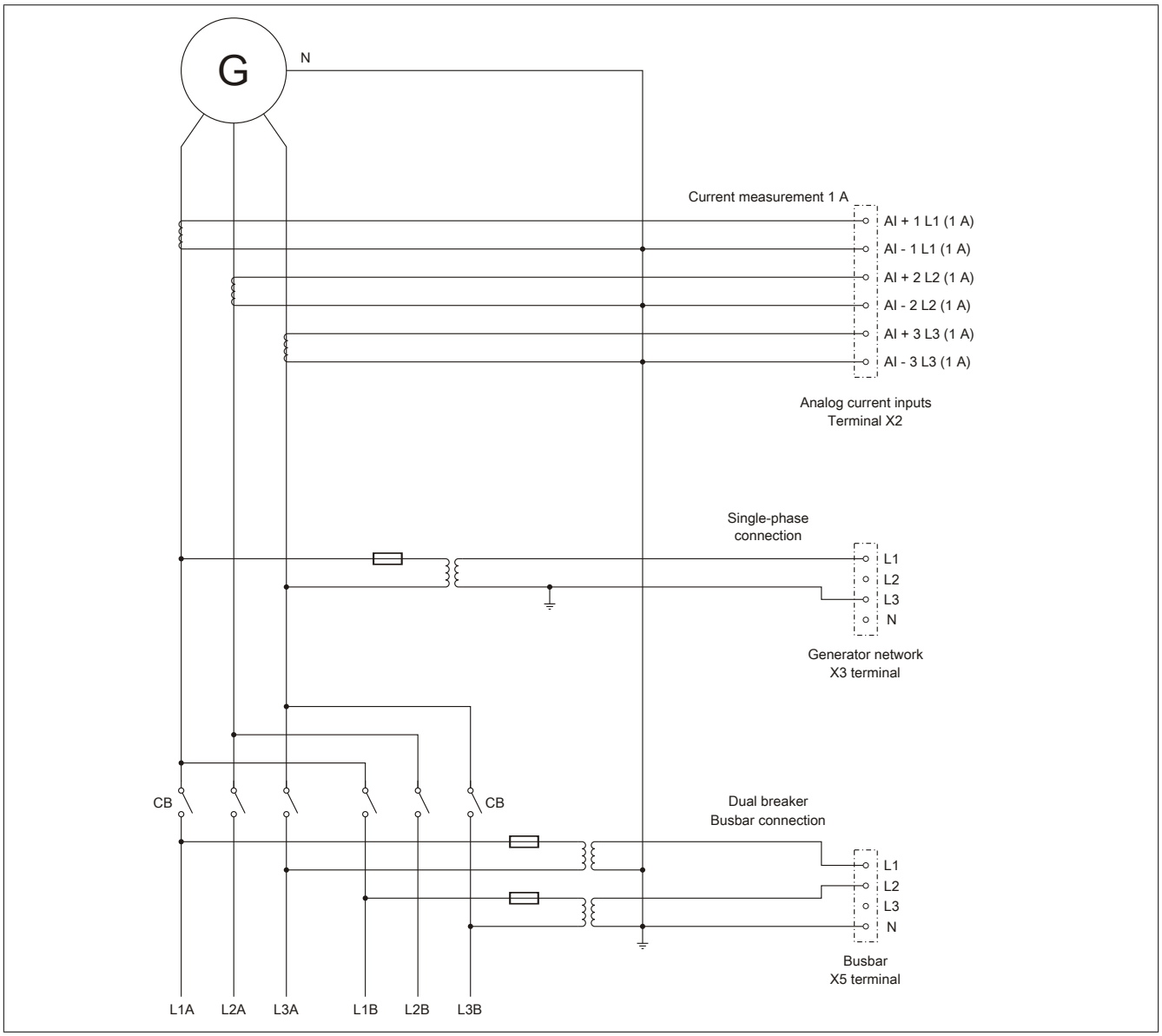

Connection example 4

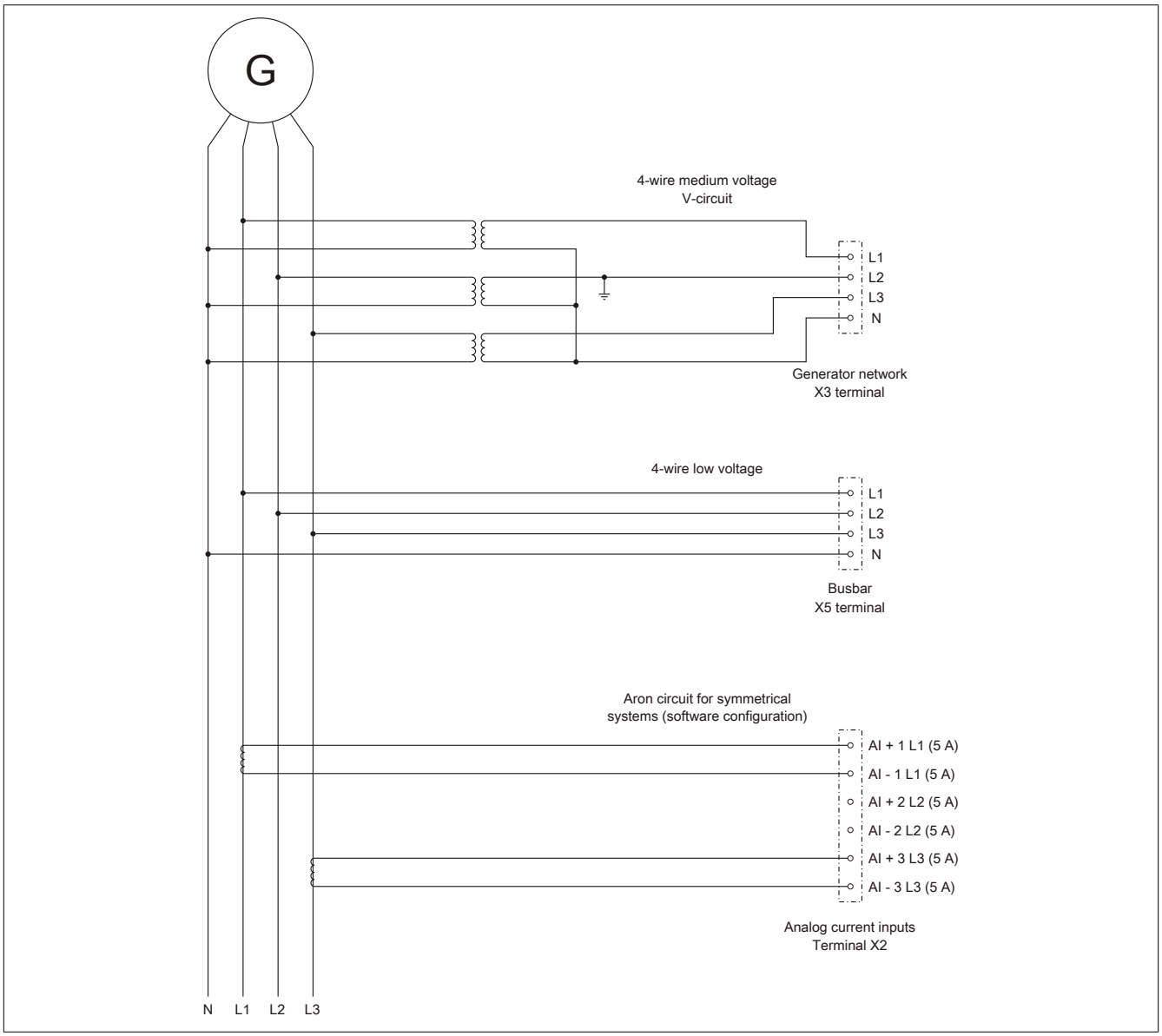

3.11 Electrical service life

The electrical service life for the DO1 relay output can be seen in the following diagram.

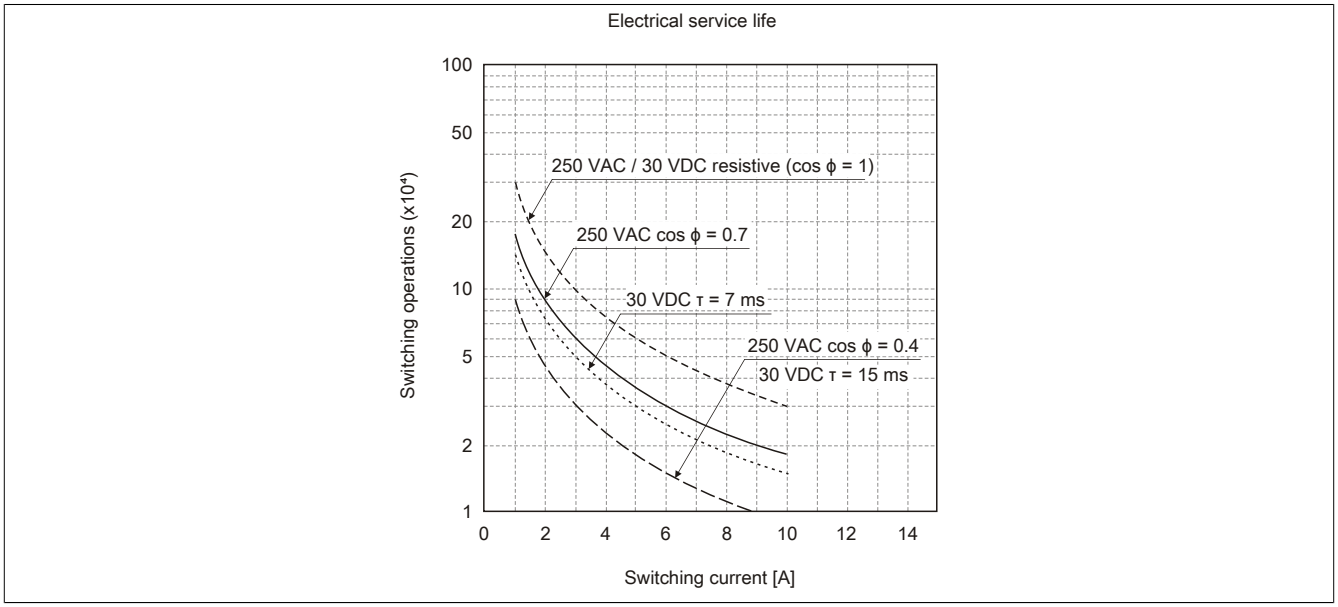

3.12 Releasing the locking clip for terminals X3 - X6

Terminals X3 - X6 are equipped with a terminal locking clip. This clip attaches the terminal block securely to the electronic module. This prevents the terminal from accidentally being disconnected.

To release the locking clip, press inwards on the corrugated part of the lever with your fingertip (1) and then slide outwards (2). No additional tools are required for removing the terminal.

Terminals X5 and X6 must be removed first before terminals X3 and X4 can be removed.



3.13 Synchronization functions

The following three synchronization functions are available on the module:

- "Synchronization with slip" on page 15
- "Synchro check" on page 16
- "Switching to voltage-free "dead bus"" on page 16

Synchronization with slip

The following is valid for synchronization mains 1 and synchronization mains 2:

- 50% < U < 125% of the nominal voltage U_N
- 80% < f < 110% of the nominal frequency f_N

The generator voltage is adjusted to the synchronization voltage with regard to amplitude and frequency. Taking into account the configured phase angle (Δα), a defined transformer vector group and the switching response time, the switch-on command is calculated and transmitted in advance so that the main contacts of the power switch are closed at the point of synchronicity.

Synchronization occurs under the following conditions:

- The "Synchronization selection" command is set using a software application
- The device is ready.
- The configured limit for voltage difference is not exceeded (ΔU_{max}).
- The configured limits for frequency difference are not exceeded (Δf_{max} and Δf_{min}).
- The configured limit for the phase angle (including vector group transformer Δα) is not exceeded (j_{max}).

The actual synchronization is "authorized" if the condition for the phase angle is met the first time and the phase window is exited once. It should be noted that the conditions for voltage and frequency difference do not yet have to be fulfilled this first time.

This means that if the phase difference happens to lie within the phase window when the request is made, it is not necessary to re-enter the window for this "authorization" to take place. In order to abort synchronization when in an "authorized" state, the "Synchronization with slip" command must be reset.

After the synchronization command has been authorized, the synchronization window of all the aforementioned synchronization conditions must be entered again from any phase angle in order to obtain a synchronization impulse in accordance with the switch lead time.

At very low frequencies or equivalent frequencies and in adherence to the conditions described above, synchronization will also take place when entering the synchronization window a second time. The synchronization impulse is only issued at a phase angle = 0°, however.

At low differential frequencies, the switch is not immediately engaged when the phase window is reached. This only occurs when synchronization is possible at the point of synchronicity.

DO4 changes its state from Low to High when all conditions are met. It changes back from High to Low after the configured pulse duration has elapsed.

Synchro check

In this operating mode, the device can be used to check the synchronization. The DO4 output remains set as long as the following conditions are met:

- The "Enable Synchro Check" command is set using software.
- The device is ready.
- The configured limit for voltage difference is not exceeded (ΔU_{max}).
- The configured limits for frequency difference are not exceeded (Δf_{max} and Δf_{min}).
- The defined limit for the phase angle is not exceeded (ϕ_{max}).

DO4 stays at High as long as all conditions are met.

Switching to voltage-free "dead bus"

The switch-on command for the power switch is output without synchronization if the following conditions have been met:

- The "Enable Dead Bus" command is set using software.
- The device is ready.
- The bus bar does not have voltage applied: $U_B < U_{Bmin}$ as a percentage of U_{NomBus}

  U_B ... Bus bar phase voltage
  U_{Bmin} ... Minimum bus bar voltage
  U_{NomBus} ... Bus bar nominal voltage

- The generator voltage and frequency can be any valid value.

DO4 changes its state from Low to High when all conditions are met. It changes back from High to Low after the configured pulse duration has elapsed.

3.14 Measurement functions

Timing diagram

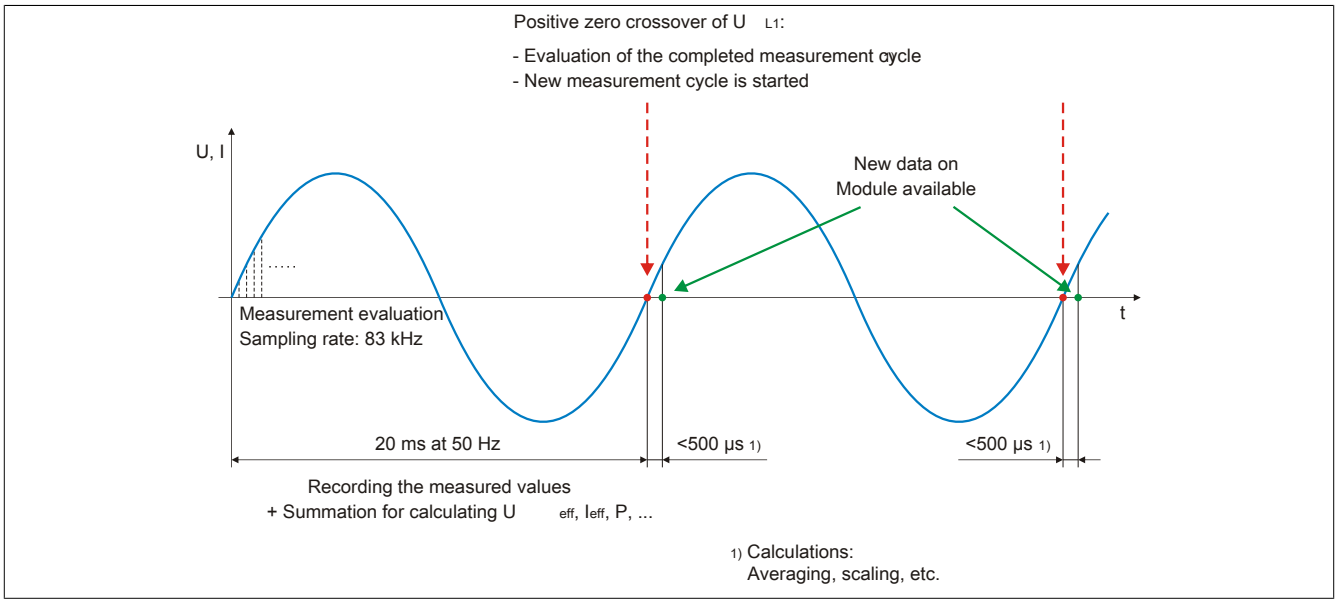

Measured parameters for generator mains (X3)

- Phase currents
- Current average
- Dynamic current average
- Neutral current
- Line-to-line voltages
- Phase voltages
- Voltage average
- Total apparent power
- Total reactive power
- Total active power
- Active power factor
- Frequency

Measured parameters between synchronization mains networks

- Differential angle
- Differential voltage

Dependent overcurrent

Dependent overcurrent monitoring meets the requirements of EN 60255-151.

Dependent delayed imbalanced load monitoring

Dependent delayed imbalanced load monitoring protects against imbalanced loads in three-phase generators and three-phase mains. Parameters can be changed to make it possible to match the trigger characteristics to different generator types while taking their special thermal time constants into consideration.

An imbalanced load can be caused by uneven current distribution in the mains due to imbalanced load, asymmetrical short circuits, line interruptions or switching operations. Imbalanced loads result in reverse system currents in the stator, which causes harmonics with an uneven ordinal number in the stator winding and harmonics with an even ordinal number in the rotor winding. The rotor is at particular risk here because the harmonic waves place an additional load on the rotor winding and induce eddy currents in the rotor's solid iron, which may melt the metal or destroy the metallic structure.

An imbalanced load can be permissible within certain limits, however, when accounting for the thermal load limit of the generator. To avoid premature failure of the generator when an imbalanced load occurs, the characteristics that trigger imbalanced load protection should be adapted to the thermal characteristics of the generator. Imbalanced load protection can also be triggered by external errors in the mains caused by asymmetric short circuits.

Short circuit current monitoring

If overcurrent or a short circuit occurs and the limit value is exceeded, the error message "Overcurrent / Short circuit" is signaled after the configured time delay has passed.

Voltage asymmetry monitoring

The trigger value, which is adjustable by percentage, is always based on the respective average voltage of the linked generator voltages. This value defines the maximum permitted deviation of one of the three differential voltages between the three monitored, interlinked phase voltages.

If this value is exceeded in either direction, the error notification "Asymmetrical voltage" is indicated after the configured time delay has passed.

Bus bar voltage measurement and zero voltage monitoring

3-phase monitoring takes place for the bus bar voltage. The measured values are represented as phase-to-phase and phase-to-neutral values. The D03 output is set when there is no voltage (below the lower dead bus limit) on the bus bar (X5 terminal).

This monitoring can be used to determine which synchronization function should be used.

Synchronization function	Bus bar voltage measurement
Dead bus	No voltage is being supplied to the bus bar or the value is below the lower limit parameter. Output DO3 is set.
Synchronization with slip	The voltage measured on the bus bar is above the defined parameter value. Output DO3 is not set.

Exciter failure

The reactive power monitoring can be used to protect a generator against operating in the impermissible range. The capacitive reactive power monitor offers protection against under-excitation (exciter failure). If the lower limit is exceeded (in the negative direction), the error message "Exciter failure" is signaled after the configured time delay has passed.

3.15 Derating

Derating does not need to be taken into account for operation below 55°C.

For operation above 55°C, a dummy module must be connected to the left of the module. A maximum supply current of 1 A is permitted to pass through the module to the modules connected to the right.

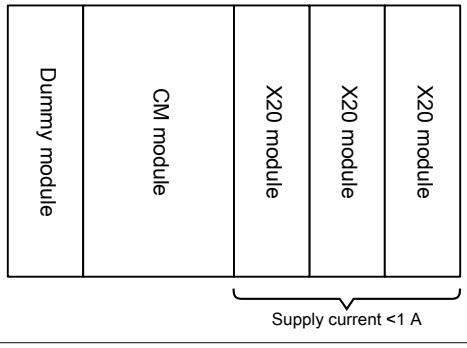

4 Register description

4.1 General data points

In addition to the registers described in the register description, the module has additional general data points. These are not module-specific but contain general information such as serial number and hardware variant.

General data points are described in section "Additional information - General data points" in the X20 system user's manual.

4.2 Function model 0 - default

Register	Name	Data type	Read		Write	
			Cyclic	Acyclic	Cyclic	Acyclic
Generator mains - Configuration						
2582	ConfigOutput02 Nominal voltage of generator mains (U_{NomGen})	UINT				•
2590	ConfigOutput04 Nominal current of generator mains (I_{Nom})	UINT				•
2598	ConfigOutput06 Multiplier for generator mains	UINT				•
2610	ConfigOutput09 Multiplier for current transformer	UINT				•
2658	ConfigOutput16 Overvoltage limit of generator mains (U_{max})	UINT				•
2561	ConfigOutput20 Nominal voltage range of generator mains	USINT				•
2569	ConfigOutput24 Nominal current range of the generator mains	USINT				•
2571	ConfigOutput25 Aron circuit	USINT				•
2662	ConfigOutput27 Undervoltage limit of generator mains (U_{min})	UINT				•
2782	ConfigOutput41 Low-pass filter for total power ratings	UINT				•
Generator monitoring functions - Configuration						
2614	ConfigOutput10 Nominal frequency (f_{Nom})	UINT				•
2710	ConfigOutput26 Response time for generator overvoltage (U_{max})	UINT				•
2718	ConfigOutput28 Response time for generator undervoltage (U_{min})	UINT				•
2666	ConfigOutput29 Generator over-frequency (f_{max})	UINT				•
2726	ConfigOutput30 Response time for generator over-frequency (f_{max})	UINT				•
2670	ConfigOutput31 Generator under-frequency (f_{min})	UINT				•
2734	ConfigOutput32 Response time for generator under-frequency (f_{min})	UINT				•
2674	ConfigOutput33 Generator voltage asymmetry (U_{as})	UINT				•
2742	ConfigOutput34 Response time for generator voltage asymmetry (U_{as})	UINT				•
2774	ConfigOutput35 Load time constant for current asymmetry	UINT				•
2678	ConfigOutput36 Maximum limit of neutral conductor current	UINT				•
2750	ConfigOutput37 Response time for neutral conductor current monitor	UINT				•
2682	ConfigOutput38 Short circuit current	UINT				•
2758	ConfigOutput39 Response time for short circuit current	UINT				•
2686	ConfigOutput42 Dependent overcurrent	UINT				•
2690	ConfigOutput43 Time factor setting (iths) for dependent overcurrent	UINT				•
2694	ConfigOutput44 Capacitive reactive power	INT				•
2766	ConfigOutput45 Response time for reactive power monitoring	UINT				•
2698	ConfigOutput57 DO1 function	UINT				•
Busbar - Configuration						
2586	ConfigOutput03 Busbar nominal voltage (U_{NomBus})	UINT				•

Register	Name	Data type	Read		Write	
			Cyclic	Acyclic	Cyclic	Acyclic
2594	ConfigOutput05 Multiplier for busbar	UINT				•
2563	ConfigOutput21 Nominal voltage range of busbar	USINT				•
2650	ConfigOutput40 Minimum busbar voltage (U_{Bmin})	UINT				•
Synchronization - Configuration						
518	ConfigOutput Synchronization mode	USINT			•	
2578	ConfigOutput01 Nominal voltage of synchronization mains (U_{NomSyn})	UINT				•
2602	ConfigOutput07 Multiplier for synchronization network 1	UINT				•
2606	ConfigOutput08 Multiplier for synchronization network 2	UINT				•
2626	ConfigOutput11 Max. differential frequency (df_{max})	UINT				•
2630	ConfigOutput12 Min. differential frequency (df_{min})	INT				•
2634	ConfigOutput13 Max. differential voltage (dU_{max})	UINT				•
2638	ConfigOutput14 Max. permitted differential angle (ϕ_{Max})	UINT				•
2618	ConfigOutput15 Phase rotation of synchronization network 1 (dα)	UINT				•
2565	ConfigOutput22 Nominal voltage range of synchronization network 1	USINT				•
2567	ConfigOutput23 Nominal voltage range of synchronization network 2	USINT				•
2794	ConfigOutput47 Pulse duration of the turn-on delay	UINT				•
2798	ConfigOutput48 Switching response time of the power switch	UINT				•
2654	ConfigOutput56 Synchronization configuration	UINT				•
2622	ConfigOutput58 Dead bus voltage	UINT				•
Maximum value buffer and power meter - Configuration						
2790	ConfigOutput46 Pulse value of energy meter output	UINT				•
2950	ConfigOutput49 Maximum phase current I1	INT		•		
2054	ConfigOutput50 Maximum phase current I2	INT		•		
2058	ConfigOutput51 Maximum phase current I3	INT		•		
2062	ConfigOutput52 Maximum total active power	INT		•		
2066	ConfigOutput53 Maximum neutral conductor current	INT		•		
2076	ConfigOutput54 Active energy counter	DINT		•		
2084	ConfigOutput55 Reactive energy counter	DINT		•		
2834	ConfigOutput60 Reset maximum phase current I1	INT				•
2838	ConfigOutput61 Reset maximum phase current I2	INT				•
2842	ConfigOutput62 Reset maximum phase current I3	INT				•
2846	ConfigOutput63 Resets maximum total active power	INT				•
2850	ConfigOutput64 Resets maximum neutral conductor current	INT				•
2860	ConfigOutput66 Reset active energy meter	DINT				•
2868	ConfigOutput67 Write to reactive energy meter	DINT				•
General registers - Communication						
514	DigitalOutput Digital outputs 05 to 06	USINT			•	
	DigitalOutput05	Bit 0				
	DigitalOutput06	Bit 1				

Register	Name	Data type	Read		Write	
			Cyclic	Acyclic	Cyclic	Acyclic
126	Status of digital outputs Status of digital outputs	UINT	•			
	StatusDigitalOutput01	Bit 0				
	...	...				
	StatusDigitalOutput06	Bit 5				
	StatusInput17	Bit 6				
	StatusInput16	Bit 7				
122	Error register Error registers	UINT	•			
	StatusInput01	Bit 0				
	...	...				
	StatusInput15	Bit 14				
Generator mains measured values - Communication						
2	AnalogInput01 Phase current I1	INT	•			
6	AnalogInput02 Phase current I2	INT	•			
10	AnalogInput03 Phase current I3	INT	•			
14	AnalogInput04 Current average I1, I2, I3	INT	•			
18	AnalogInput05 Neutral conductor current In	INT	•			
22	AnalogInput06 Current average, dynamic (Im_dyn)	UINT	•			
26	AnalogInput07 Line-to-line voltage UG12	INT	•			
30	AnalogInput08 Line-to-line voltage UG23	INT	•			
34	AnalogInput09 Line-to-line voltage UG31	INT	•			
38	AnalogInput10 Phase voltage UG1	INT	•			
42	AnalogInput11 Phase voltage UG2	INT	•			
46	AnalogInput12 Phase voltage UG3	INT	•			
74	AnalogInput19 Total active power filtered P/P_H1	INT	•			
78	AnalogInput20 Total reactive power filtered Q/Q_H1	INT	•			
82	AnalogInput21 Total apparent power filtered Q/S_H1	INT	•			
86	AnalogInput22 Voltage average UG12, UG23, UG31	INT	•			
90	AnalogInput23 Power factor of generator/cos ϕ	INT	•			
94	AnalogInput24 Frequency of the generator mains	UINT	•			
Measured values for busbar - Communication						
50	AnalogInput13 Line-to-line voltage of busbar UB12	INT	•			
54	AnalogInput14 Line-to-line voltage of busbar UB23	INT	•			
58	AnalogInput15 Line-to-line voltage of busbar UB31	INT	•			
62	AnalogInput16 Phase voltage of busbar UB1	INT	•			
66	AnalogInput17 Phase voltage of busbar UB2	INT	•			
70	AnalogInput18 Phase voltage of busbar UB3	INT	•			
Measured values of synchronization mains - Communication						
98	AnalogInput25 Line-to-line voltage of synchronization network 1 US1	INT	•			
102	AnalogInput26 Line-to-line voltage of synchronization network 2 US2	INT	•			
106	AnalogInput27 Frequency of synchronization network 1	UINT	•			
110	AnalogInput28 Frequency of synchronization network 2	UINT	•			
114	AnalogInput29 Differential angle between synchronization networks	INT	•			
118	AnalogInput30 Differential voltage between synchronization networks	INT	•			

4.3 Function model 254 - Bus controller

Register	Offset[1)]	Name	Data type	Read		Write	
				Cyclic	Acyclic	Cyclic	Acyclic
Generator mains - Configuration							
2582	-	ConfigOutput02 Nominal voltage of generator mains	UINT				•
2590	-	ConfigOutput04 Nominal current of generator mains	UINT				•
2598	-	ConfigOutput06 Multiplier for generator mains	UINT				•
2610	-	ConfigOutput09 Multiplier for current transformer	UINT				•
2658	-	ConfigOutput16 Overvoltage limit of generator mains	UINT				•
2561	-	ConfigOutput20 Nominal voltage range of generator mains	USINT				•
2569	-	ConfigOutput24 Nominal current range of the generator mains	USINT				•
2571	-	ConfigOutput25 Aron circuit	USINT				•
2662	-	ConfigOutput27 Undervoltage limit of generator mains	UINT				•
2782	-	ConfigOutput41 Low-pass filter for total power ratings	UINT				•
Generator monitoring functions - Configuration							
2614	-	ConfigOutput10 Rated frequency	UINT				•
2710	-	ConfigOutput26 Response time for generator overvoltage	UINT				•
2718	-	ConfigOutput28 Response time for generator undervoltage	UINT				•
2666	-	ConfigOutput29 Generator overfrequency	UINT				•
2726	-	ConfigOutput30 Response time for generator overfrequency	UINT				•
2670	-	ConfigOutput31 Generator underfrequency	UINT				•
2734	-	ConfigOutput32 Response time for generator underfrequency	UINT				•
2674	-	ConfigOutput33 Generator voltage asymmetry	UINT				•
2742	-	ConfigOutput34 Response time for generator asymmetry	UINT				•
2774	-	ConfigOutput35 Load time constant for current asymmetry	UINT				•
2678	-	ConfigOutput36 Maximum limit of neutral conductor current	UINT				•
2750	-	ConfigOutput37 Response time for neutral conductor current monitor	UINT				•
2682	-	ConfigOutput38 Short circuit current	UINT				•
2758	-	ConfigOutput39 Response time for short circuit current	UINT				•
2686	-	ConfigOutput42 Dependent overcurrent	UINT				•
2690	-	ConfigOutput43 Time factor setting (iths) for dependent over-current	UINT				•
2694	-	ConfigOutput44 Capacitive reactive power	INT				•
2766	-	ConfigOutput45 Response time for reactive power monitoring	UINT				•
2698	-	ConfigOutput57 DO1 function	UINT				•
Busbar - Configuration							
2586	-	ConfigOutput03 Nominal voltage of busbar	UINT				•
2594	-	ConfigOutput05 Multiplier for busbar	UINT				•
2563	-	ConfigOutput21 Nominal voltage range of busbar	USINT				•
2650	-	ConfigOutput40 Minimum busbar voltage	UINT				•
Synchronization - Configuration							
518	2	ConfigOutput Synchronization mode	USINT			•	
2578	-	ConfigOutput01 Nominal voltage of the synchronization net-works	UINT				•

Register	Offset[1)]	Name	Data type	Read		Write	
				Cyclic	Acyclic	Cyclic	Acyclic
2602	-	ConfigOutput07 Multiplier for synchronization network 1	UINT				•
2606	-	ConfigOutput08 Multiplier for synchronization network 2	UINT				•
2626	-	ConfigOutput11 Maximum permitted difference frequency	UINT				•
2630	-	ConfigOutput12 Minimum permitted difference frequency	INT				•
2634	-	ConfigOutput13 Maximum permitted differential voltage	UINT				•
2638	-	ConfigOutput14 Maximum permitted differential angle	UINT				•
2618	-	ConfigOutput15 Phase rotation of synchronization network 1	UINT				•
2565	-	ConfigOutput22 Nominal voltage range of synchronization network 1	USINT				•
2567	-	ConfigOutput23 Nominal voltage range of synchronization network 2	USINT				•
2794	-	ConfigOutput47 Pulse duration of the turn-on delay	UINT				•
2798	-	ConfigOutput48 Switching response time of the power switch	UINT				•
2654	-	ConfigOutput56 Synchronization configuration	UINT				•
2622	-	ConfigOutput58 Dead bus voltage	UINT				•
Maximum value buffer and power meter - Configuration							
2790	-	ConfigOutput46 Pulse value of energy meter output	UINT				•
2950	-	ConfigOutput49 Maximum phase current I1	INT		•		
2054	-	ConfigOutput50 Maximum phase current I2	INT		•		
2058	-	ConfigOutput51 Maximum phase current I3	INT		•		
2062	-	ConfigOutput52 Maximum total active power	INT		•		
2066	-	ConfigOutput53 Maximum neutral conductor current	INT		•		
2076	-	ConfigOutput54 Active energy counter	DINT		•		
2084	-	ConfigOutput55 Reactive energy counter	DINT		•		
2834	-	ConfigOutput60 Reset maximum phase current I1	INT				•
2838	-	ConfigOutput61 Reset maximum phase current I2	INT				•
2842	-	ConfigOutput62 Reset maximum phase current I3	INT				•
2846	-	ConfigOutput63 Resets maximum total active power	INT				•
2850	-	ConfigOutput64 Resets maximum neutral conductor current	INT				•
2860	-	ConfigOutput66 Reset active energy meter	DINT				•
2868	-	ConfigOutput67 Write to reactive energy meter	DINT				•
General registers - Communication							
514	0	DigitalOutput Digital outputs 05 to 06	USINT			•	
		DigitalOutput05	Bit 0				
		DigitalOutput06	Bit 1				
126	62	Status of digital outputs Status of digital outputs	UINT	•			
		StatusDigitalOutput01	Bit 0				
		...	...				
		StatusDigitalOutput06	Bit 5				
		StatusInput17	Bit 6				
		StatusInput16	Bit 7				
122	60	Error register Error registers	UINT	•			
		StatusInput01	Bit 0				
		...	...				
		StatusInput15	Bit 14				
Generator mains measured values - Communication							
2	16	AnalogInput01 Phase current I1	INT	•			

Register	Offset[1)]	Name	Data type	Read		Write	
				Cyclic	Acyclic	Cyclic	Acyclic
6	18	AnalogInput02 Phase current I2	INT	•			
10	20	AnalogInput03 Phase current I3	INT	•			
14	46	AnalogInput04 Current average I1, I2, I3	INT	•			
18	22	AnalogInput05 Neutral conductor current In	INT	•			
22	38	AnalogInput06 Current average, dynamic	UINT	•			
26	0	AnalogInput07 Line-to-line voltage UG12	INT	•			
30	2	AnalogInput08 Line-to-line voltage UG23	INT	•			
34	4	AnalogInput09 Line-to-line voltage UG31	INT	•			
38	8	AnalogInput10 Phase voltage UG1	INT	•			
42	10	AnalogInput11 Phase voltage UG2	INT	•			
46	12	AnalogInput12 Phase voltage UG3	INT	•			
74	40	AnalogInput19 Total active power filtered P/P_H1	INT	•			
78	42	AnalogInput20 Total reactive power filtered Q/Q_H1	INT	•			
82	44	AnalogInput21 Total apparent power filtered Q/S_H1	INT	•			
86	14	AnalogInput22 Voltage average UG12, UG23, UG31	INT	•			
90	30	AnalogInput23 Power factor of generator/cos ϕ	INT	•			
94	6	AnalogInput24 Frequency of the generator mains	UINT	•			
Measured values for busbar - Communication							
50	32	AnalogInput13 Line-to-line voltage of busbar UB12	INT	•			
54	34	AnalogInput14 Line-to-line voltage of busbar UB23	INT	•			
58	36	AnalogInput15 Line-to-line voltage of busbar UB31	INT	•			
62	24	AnalogInput16 Phase voltage of busbar UB1	INT	•			
66	26	AnalogInput17 Phase voltage of busbar UB2	INT	•			
70	28	AnalogInput18 Phase voltage of busbar UB3	INT	•			
Measured values of synchronization mains - Communication							
98	48	AnalogInput25 Line-to-line voltage of synchronization network 1 US1	INT	•			
102	50	AnalogInput26 Line-to-line voltage of synchronization network 2 US2	INT	•			
106	52	AnalogInput27 Frequency of synchronization network 1	UINT	•			
110	54	AnalogInput28 Frequency of synchronization network 2	UINT	•			
114	56	AnalogInput29 Differential angle between synchronization networks	INT	•			
118	58	AnalogInput30 Differential voltage between synchronization networks	INT	•			

1) The offset specifies the position of the register within the CAN object.

4.3.1 Using the module on the bus controller

Function model 254 "Bus controller" is used by default only by non-configurable bus controllers. All other bus controllers can use other registers and functions depending on the fieldbus used.

For detailed information, see section "Additional information - Using I/O modules on the bus controller" in the X20 user's manual (version 3.50 or later).

4.3.2 CAN I/O bus controller

The module occupies 8 analog logical slots on CAN I/O.

4.4 Configuration registers

4.4.1 Generator mains

4.4.1.1 Nominal voltage of generator mains (U_{NomGen})

Name:
ConfigOutput02

This is needed for converting the percentages based on this nominal value into physical units.

Data type	Value	Information	Resolution
UINT	70 to 65000	Corresponds to 70 to 65000 V. Bus controller default setting: 0	1 V

4.4.1.2 Nominal current of generator mains (I_{Nom})

Name:
ConfigOutput04

This is needed for converting the percentages based on this nominal value into physical units.

Data type	Value	Information	Resolution
UINT	0 to 65000	Corresponds to 0 to 65000 A. Bus controller default setting: 0	1 A

4.4.1.3 Multiplier for generator mains

Name:
ConfigOutput06

This is used for converting the measured value into a physical value. The multiplier is applied to the respective input value.

The value 100 corresponds to a multiplication factor of 1 (measured value not changed).

Data type	Value	Information	Resolution
UINT	1 to 65535	Corresponds to 0.01 to 655.35. Bus controller default setting: 0	0.01

4.4.1.4 Multiplier for current transformer

Name:
ConfigOutput09

This is used for converting the measured value into a physical value. The multiplier is applied to the respective input value.

Data type	Value	Information	Resolution
UINT	1 to 65535	Corresponds to 1 to 65535. Bus controller default setting: 0	1

4.4.1.5 Overvoltage limit of generator mains (U_{max})

Name:
ConfigOutput16

If the value of one of the linked generator voltages exceeds the value set here, then the "Overvoltage" error message (register "Error register" on page 39) is indicated after the delay time has passed and, if configured, the DO1 monitoring relay is switched.

Data type	Value	Information	Resolution
UINT	0 to 2000	Corresponds to 0 to 200% of U_{NomGen}. Bus controller default setting: 0	0.1%

4.4.1.6 Nominal voltage range of generator mains

Name:
ConfigOutput20

Can be toggled between 100 and 400 V.

Data type	Values	Bus controller default setting
USINT	See the bit structure.	1

Bit structure:

Bit	Description	Value	Information
0	Voltage	0	100 V
		1	400 V (bus controller default setting)
1 - 7	Reserved	-	

4.4.1.7 Nominal current range of the generator mains

Name:
ConfigOutput24

Can be toggled between 1 and 5 A.

Data type	Values	Bus controller default setting
USINT	See the bit structure.	1

Bit structure:

Bit	Description	Value	Information
0	Current range	0	1 A
		1	5 A (bus controller default setting)
1 - 7	Reserved	-	

4.4.1.8 Aron circuit

Name:
ConfigOutput25

Switch to power measurement principle of Aron circuit.

Data type	Values	Bus controller default setting
USINT	See the bit structure.	0

Bit structure:

Bit	Description	Value	Information
0	Aron circuit	0	Disabled: Three-phase power system with neutral conductor (bus controller default setting)
		1	Enabled: Three-phase supply without neutral line
1 - 7	Reserved	-	

4.4.1.9 Undervoltage limit of generator mains (U_{min})

Name:
ConfigOutput27

If the value of one of the linked generator voltages falls below the value set here, then the "Undervoltage" error message (register "Error register" on page 39) is indicated after the delay time has passed and, if configured, the DO1 monitoring relay is switched.

Data type	Value	Information	Resolution
UINT	0 to 2000	Corresponds to 0 to 200% of U_{NomGen}. Bus controller default setting: 0	0.1%

4.4.1.10 Low-pass filter for total power ratings

Name:
ConfigOutput41

Parameter for the response time of the low-pass filter of the total power values P, Q and S. The maximum total power values are recorded independently of this without being filtered.

This parameter is used as a delay element so that current or voltage fluctuations have less effect on how the calculated power values are represented. The damping behavior of the low-pass filter acts in accordance with the configurable time constant of a decaying e-function.

Data type	Value	Information	Resolution
UINT	0 to 300	Corresponds to 0 to 300 ms. Bus controller default setting: 0	1 ms

4.4.2 Generator monitoring

4.4.2.1 Nominal frequency (f_{Nom})

Name:
ConfigOutput10

This is needed for converting the percentages based on this nominal value into physical units.

Data type	Value	Information	Resolution
UINT	480 to 620	Corresponds to 48 to 62 Hz. Bus controller default setting: 0	0.1 Hz

4.4.2.2 Response time for generator overvoltage (U_{max})

Name:
ConfigOutput26

The error is only triggered if the response value is exceeded in the positive direction without interruption for as long as is specified in this register.

Data type	Value	Information	Resolution
UINT	5 to 100	Corresponds to 0.5 to 10 s; Bus controller default setting: 0	0.1 s

4.4.2.3 Response time for generator undervoltage (U_{min})

Name:
ConfigOutput28

The error is only triggered if the response value is exceeded in the negative direction without interruption for as long as is specified in this register.

The values of these registers can be read back.

Data type	Value	Information	Resolution
UINT	5 to 100	Corresponds to 0.5 to 10 s; Bus controller default setting: 0	0.1 s

4.4.2.4 Generator over-frequency (f_{max})

Name:
ConfigOutput29

If the value of the generator frequency exceeds the percentage of the nominal frequency set here, then the error message "Overfrequency" is indicated (register "Error register" on page 39) and, if configured, the DO1 monitoring relay is switched.

Data type	Value	Information	Resolution
UINT	0 to 2000	For 0 to 200% of f_{Nom}. Bus controller default setting: 0	0.1%

4.4.2.5 Response time for generator over-frequency (f_{max})

Name:
ConfigOutput30

The error is only triggered if the response value is exceeded in the positive direction without interruption for as long as is specified in this register.

Data type	Value	Information	Resolution
UINT	5 to 100	For 0.5 for 10 s. Bus controller default setting: 0	0.1 s

4.4.2.6 Generator under-frequency (f_{min})

Name:
ConfigOutput31

If the value of the generator frequency falls below the percentage of the nominal frequency set here, then the error message "Underfrequency" is indicated (register "Error register" on page 39) and, if configured, the DO1 monitoring relay is switched.

Data type	Value	Information	Resolution
UINT	0 to 2000	For 0 to 200% of f_{Nom}. Bus controller default setting: 0	0.1%

4.4.2.7 Response time for generator under-frequency (f_{min})

Name:
ConfigOutput32

The error is only triggered if the response value is exceeded in the negative direction without interruption for as long as is specified in this register.

Data type	Value	Information	Resolution
UINT	5 to 100	For 0.5 to 10 s. Bus controller default setting: 0	0.1 s

4.4.2.8 Generator voltage asymmetry (U_{as})

Name:
ConfigOutput33

The trigger value, which is adjustable by percentage, is always based on the respective average voltage of the linked generator voltages. If the value of the voltage difference exceeds or falls below the value set here, then the "Voltage asymmetry" error message is indicated (register "Error register" on page 39) after the delay time has passed and, if configured, the DO1 monitoring relay is switched.

Data type	Value	Information	Resolution
UINT	0 to 300	For 0 to 30% of U~3average. Bus controller default setting: 0	0.1%

4.4.2.9 Response time for generator voltage asymmetry (U_{as})

Name:
ConfigOutput34

This error is triggered only if the response value is exceeded without interruption (in either the positive or negative direction) for as long as is specified in this register.

Data type	Value	Information	Resolution
UINT	5 to 100	For 0.5 to 10 s. Bus controller default setting: 0	0.1 s

4.4.2.10 Load time constant for current asymmetry

Name:
ConfigOutput35

The dependent delayed unbalanced load monitoring function continually monitors the AC currents coming from the main current converters and continually calculates the present unbalanced load current. This is compared with the threshold value, which is calculated using the load time constants. If this threshold value is exceeded, the error message "Current asymmetry" is indicated (register "Error register" on page 39) and, if configured, the DO1 monitoring relay is switched.

Data type	Value	Information	Resolution
UINT	1 to 65535	For 0.1 to 6553.5 s. Bus controller default setting: 0	0.1 s

Dependent delayed unbalanced load monitoring

Unbalanced load monitoring protects against unbalanced load in three-phase generators and three-phase mains. Parameters can be changed to make it possible to match the trigger characteristics to different generator types while taking their special thermal time constants into consideration.

An unbalanced load can be caused by uneven current distribution in the mains due to unbalanced load, asymmetrical short circuits, line interruptions or switching operations. Unbalanced loads result in reverse system currents in the stator, which causes harmonics with an uneven ordinal number in the stator winding and harmonics with an even ordinal number in the rotor winding. The rotor is at particular risk here because the harmonic waves place an additional load on the rotor winding and induce eddy currents in the rotor's solid iron, which may melt the metal or destroy the metallic structure.

An unbalanced load can be permissible within certain limits, however, when accounting for the thermal load limit of the generator. To avoid premature failure of the generator when an unbalanced load occurs, the characteristics that trigger unbalanced load protection should be adapted to the thermal characteristics of the generator. Unbalanced load protection can also be triggered by external errors in the mains caused by asymmetric short circuits.

When unbalanced load protection is tripped can be calculated using the following formula:

Operating mode	Formula
Short-term operation	$t = \frac{K1}{(\frac{I_2}{I_{Nom}})^2 - 0.08^2}$
Continuous operation	$\frac{I_2}{I_{Nom}} \leq 0.08 \rightarrow t = \infty$

Key	
t	Calculated tripping time
K1	Valid load time constant for the generator [s]
I_2	Calculated inverse current / unbalanced load current [A]
I_{Nom}	Nominal current for the generator [A]

To calculate the tripping time instant, the scan duration of the measurement system (i.e. 20 ms for 50 Hz voltage) is divided by the calculated trigger time, and the results are continually added up. With short-term operation, the value of the summands increases; with continuous operation, it decreases. If the summand reaches the value 1 (100%), then the max. permitted value has been reached. The summand is limited between 0 and 1.

Information:

The boundary between continuous operation and short-term operation is always 0.08 for calculations.

When the generator is at a standstill, the summand is neither reset nor is its value reduced.

4.4.2.11 Maximum limit of neutral conductor current

Name:
ConfigOutput36

Configurable limit for the neutral conductor current. If the value is exceeded, then the error message "Maximum neutral conductor current" is indicated (register "Error register" on page 39) after the delay time has passed and, if configured, the DO1 monitoring relay is switched.

Data type	Value	Information	Resolution
UINT	0 to 1000	For 0 to 100% of I_{Nom}. Bus controller default setting: 0	0.1%

4.4.2.12 Response time for neutral conductor current monitor

Name:
ConfigOutput37

The error is only triggered if the response value is exceeded in the positive direction without interruption for as long as is specified in this register.

Data type	Value	Information	Resolution
UINT	5 to 100	For 0.5 to 10 s. Bus controller default setting: 0	0.1 s

4.4.2.13 Short circuit current

Name:
ConfigOutput38

If the value of the generator current exceeds the percentage based on the converter's nominal current set here, then the error message "Short circuit current" is indicated (register "Error register" on page 39) and, if configured, the DO1 monitoring relay is switched.

Data type	Value	Information	Resolution
UINT	1000 to 5000	For 100 to 500% of I_{Nom}. Bus controller default setting: 0	0.1%

4.4.2.14 Response time for short circuit current

Name:
ConfigOutput39

The error is only triggered if the response value is exceeded in the positive direction without interruption for as long as is specified in this register.

Data type	Value	Information	Resolution
UINT	4 to 30	For 0.04 to 0.3 s. Bus controller default setting: 0	0.01 s

4.4.2.15 Dependent overcurrent

Name:
ConfigOutput42

The response value percentage is based on the nominal current of the generator. If the response value is exceeded, then error message "Dependent overcurrent" is indicated (register "Error register" on page 39) and, if configured, monitoring relay DO1 is switched.

Data type	Value	Information	Resolution
UINT	1000 to 2000	For 100 to 200% of I_{Nom}. Bus controller default setting: 0	0.1%

Dependent overcurrent monitoring

A generator that is operated at its nominal current I_{Nom} normally reaches about half of its maximum thermal load. Operating it above the rated current I_{Nom} result in additional warming, which is permitted until the maximum temperature is reached. The highest permissible continuous temperature is determined by the class of the insulation material used in the generator.

Based on the settings and the current measurement, the device forms an internal model based on an I^2t characteristic curve of the generator temperature. This allows the heat capacity of the generator to be completely utilized for short overloads while at the same time providing full protection. The configurable parameters for determining the machine model include the nominal current I_{Nom} of the generator and the time multiplier.

4.4.2.16 Time factor setting (iths) for dependent overcurrent

Name:
ConfigOutput43

To calculate the tripping instant, the sampling duration of the measurement system is divided by the calculated tripping time (t). The results are continually added up. If the summand reaches the value 1 (100%), then the maximum permissible value has been reached. The summand is limited between 0 and 1.

Data type	Values	Information	Resolution
UINT	1 to 20	For 0.1 to 2. Bus controller default setting: 1	0.1

For a constant overcurrent, the tripping characteristic can be calculated based on the following formula:

$$t = \frac{0.14}{\left(\frac{I}{I_N}\right)^{0.02} - 1} * iths$$

Key:

t	Tripping time [s]
I	The highest value of the 3 phase currents [A]
I_N	Setpoint [A] (0.5 to 2 * I_{Nom})
iths	Time factor setting (0.1 to 2)

The monitor function can be reset by restarting the module or by falling below the overcurrent value so that the results of the continuous addition decrease according to the formula.

Tripping characteristic per EN 60255-151:2009 section 4.4.1.3 (normally inverse)

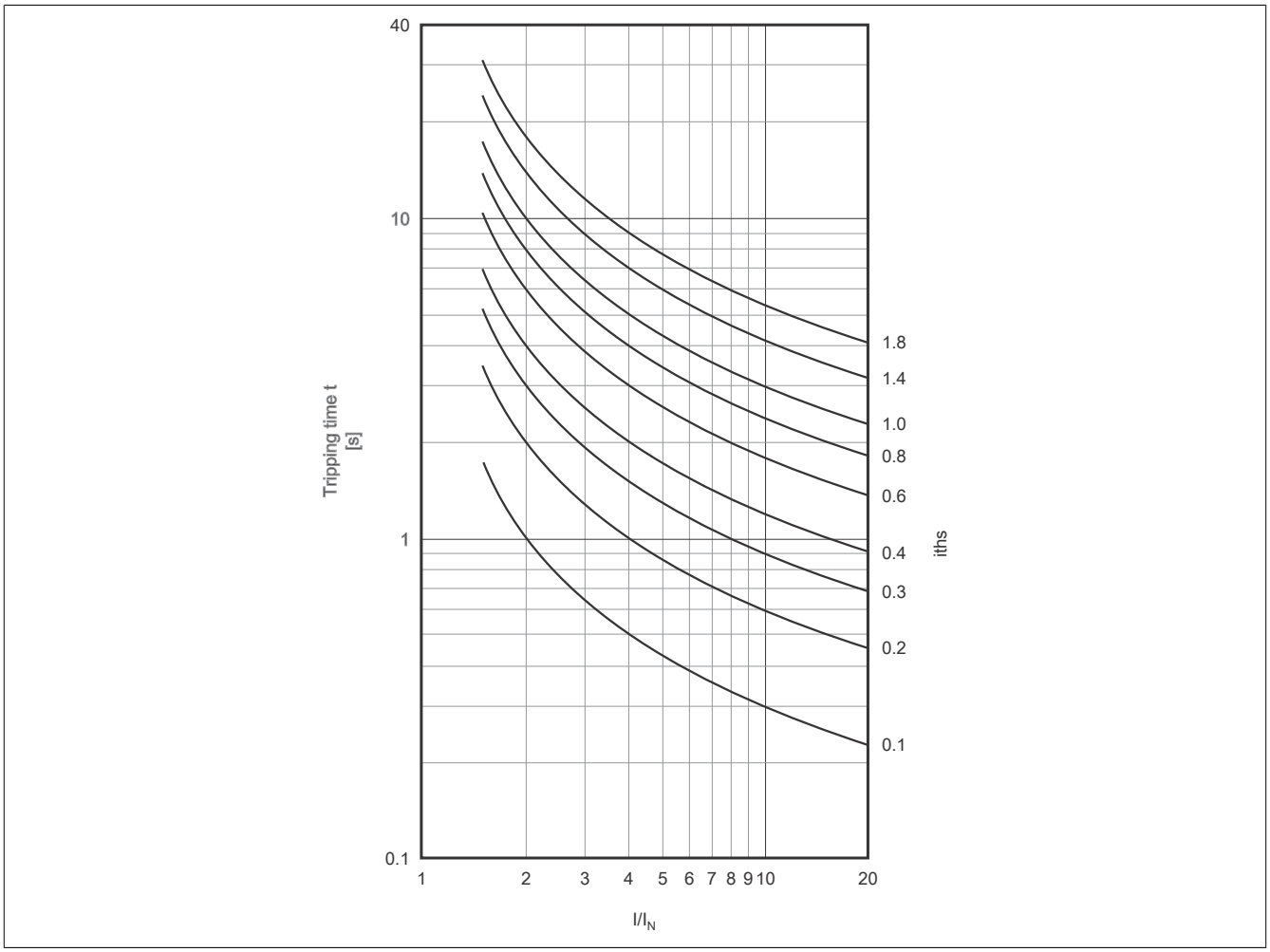

4.4.2.17 Capacitive reactive power

Name:
ConfigOutput44

The capacitive reactive power for the generator is monitored to determine if it falls below the defined response value. In this way, monitoring the capacitive reactive power can be used to detect exciter failure. If the response value is fallen below, then the error message "Capacitive reactive power" is indicated (register "Error register" on page 39) after the delay time has passed and, if configured, the DO1 monitoring relay is switched.

Data type	Value	Information	Resolution
INT	-32768 to 32767	For -32768 to 32767 kvar. Bus controller default setting: 0	1 kvar

4.4.2.18 Response time for reactive power monitoring

Name:
ConfigOutput45

The error is only triggered if the response value is exceeded in the positive direction without interruption for as long as is specified in this register.

Data type	Value	Information	Resolution
UINT	5 to 100	For 0.5 to 10 s. Bus controller default setting: 0	0.1 s

4.4.2.19 DO1 function

Name:
ConfigOutput57

This digital output can be set after the defined response time has elapsed depending on the assignment of the generator mains' monitoring variables (X3).

The monitoring variables can be assigned to this input either individually or with additional monitoring variables using an OR connective. This makes it possible to set the relay when there are multiple monitoring variables.

The following monitoring functions can be assigned to the monitoring relay using this register:

Data type	Values	Bus controller default setting
UINT	See the bit structure.	0

Bit structure:

Bit	Description	Value	Information
0	Overvoltage (of a phase)	0	Do not assign function (bus controller default setting)
		1	Assign function
1	Undervoltage (or a phase)	0	Do not assign function (bus controller default setting)
		1	Assign function
2	Overfrequency	0	Do not assign function (bus controller default setting)
		1	Assign function
3	Underfrequency	0	Do not assign function (bus controller default setting)
		1	Assign function
4	Voltage asymmetry	0	Do not assign function (bus controller default setting)
		1	Assign function
5	Current asymmetry (unbalanced load)	0	Do not assign function (bus controller default setting)
		1	Assign function
6	Neutral conductor current, maximum	0	Do not assign function (bus controller default setting)
		1	Assign function
7	Short circuit current	0	Do not assign function (bus controller default setting)
		1	Assign function
8	Dependent overcurrent	0	Do not assign function (bus controller default setting)
		1	Assign function
9	Capacitive reactive power (exciter failure)	0	Do not assign function (bus controller default setting)
		1	Assign function
10	Ready	0	Do not assign function (bus controller default setting)
		1	Assign function
11 - 15	Reserved	0	

Information:

The minimum pulse duration when addressing a monitoring function on the error bit via X2X as well as on the relay is 500 ms.

4.4.3 Busbar

4.4.3.1 Busbar nominal voltage (U_{NomBus})

Name:
ConfigOutput03

This is needed for converting the percentages based on this nominal value into physical units.

Data type	Value	Information	Resolution
UINT	70 to 65000	For 70 to 65000 V. Bus controller default setting: 0	1 V

4.4.3.2 Multiplier for busbar

Name:
ConfigOutput05

This is used for converting the measured value into a physical value. The multiplier is applied to the respective input value.

100 thus means a multiplier factor of 1 (measured value not changed).

Data type	Value	Information	Resolution
UINT	1 to 65535	For 0.01 to 655.35. Bus controller default setting: 0	0.01

4.4.3.3 Nominal voltage range of busbar

Name:
ConfigOutput21

Can be toggled between 100 and 400 V.

Data type	Values	Bus controller default setting
USINT	See the bit structure.	1

Bit structure:

Bit	Description	Value	Information
0	Voltage	0	100 V
		1	400 V (bus controller default setting)
1 - 7	Reserved	-	

4.4.3.4 Minimum busbar voltage (U_{Bmin})

Name:
ConfigOutput40

Configurable threshold for zero voltage monitoring of the busbar based on the nominal voltage of the busbar. DO3 is set when the configured threshold is undershot.

Data type	Value	Information	Resolution
UINT	0 to 1000	For 0 to 100% of U_{NomBus}. Bus controller default setting: 0	0.1%

4.4.4 Synchronization

4.4.4.1 Synchronization mode

Name:
ConfigOutput
ConfigOutput17 to ConfigOutput19

If multiple mode bits are set at the same time, then no mode will be selected (type BOOL).

Data type	Values
USINT	See the bit structure.

Bit structure:

Bit	Description	Value	Information
0	ConfigOutput17	0	Synchronization mode ≠ Slip
		1	Synchronization mode = Slip
1	ConfigOutput18	0	Synchronization mode ≠ Check
		1	Synchronization mode = Check
2	ConfigOutput19	0	Synchronization mode ≠ Dead bus
		1	Synchronization mode = Dead bus
3 - 7	Reserved	-	

4.4.4.2 Nominal voltage of synchronization mains (U_{NomSyn})

Name:
ConfigOutput01

This is needed for converting the percentages based on this nominal value into physical units.

Data type	Value	Information	Resolution
UINT	70 to 65000	For 70 to 65000 V. Bus controller default setting: 0	1 V

4.4.4.3 Multiplier for synchronization mains

Name:
ConfigOutput07 (mains 1)
ConfigOutput08 (mains 2)

This is used for converting the measured value into a physical value. The multiplier is applied to the respective input value.

100 means a multiplier factor of 1 (measured value not changed).

Data type	Value	Information	Resolution
UINT	1 to 65535	For 0.01 to 655.35. Bus controller default setting: 0	0.01

4.4.4.4 Max. differential frequency (df_{max})

Name:
ConfigOutput11

A switch-on command on DO4 is only output if this configured differential frequency is not exceeded. This value specifies the upper frequency (positive value corresponds to positive slip → generator frequency is greater than the busbar frequency when synchronizing).

Data type	Value	Information	Resolution
UINT	2 to 49	For 0.02 to 0.49 Hz. Bus controller default setting: 0	0.01 Hz

4.4.4.5 Min. differential frequency (df_{min})

Name:
ConfigOutput12

A switch-on command on DO4 is only output if this configured differential frequency is not exceeded in the negative direction. This value specifies the lower frequency (negative value corresponds to negative slip → generator frequency is less than the busbar frequency when synchronizing).

Data type	Value	Information	Resolution
INT	-49 to 0	For -0.49 to 0 Hz. Bus controller default setting: 0	0.01 Hz

4.4.4.6 Max. differential voltage (dU_{max})

Name:
ConfigOutput13

A switch-on command on DO4 is only output if this configured differential voltage percentage based on the synchronization mains' nominal voltage is not exceeded.

Data type	Value	Information	Resolution
UINT	1 to 300	For 0.1 to 30% of U_{NomSyn}. Bus controller default setting: 0	0.1%

4.4.4.7 Max. permitted differential angle (ϕ_{Max})

Name:
ConfigOutput14

A switch-on command on DO4 is only output if the configured differential angle between the two synchronization mains is not exceeded.

Data type	Value	Information	Resolution
UINT	1 to 600	For 0.1 to 60°. Bus controller default setting: 0	0.1°

4.4.4.8 Phase rotation of synchronization network 1 (dα)

Name:
ConfigOutput15

This parameter is used for correcting any phase shifting from upstream transformer vector groups before reaching the mains being synchronized.

This parameter specifies how many degrees the synchronization mains lags behind the mains being synchronized.

Data type	Value	Information	Resolution
UINT	0 to 3600	For 0 to 360°. Bus controller default setting: 0	0.1°

4.4.4.9 Nominal voltage range of synchronization mains

Name:
ConfigOutput22 (mains 1)
ConfigOutput23 (mains 2)

Can be toggled between 100 and 400 V.

Data type	Values	Bus controller default setting
USINT	See the bit structure.	1

Bit structure:

Bit	Description	Value	Information
0	Voltage	0	100 V
		1	400 V (bus controller default setting)
1 - 7	Reserved	-	

4.4.4.10 Pulse duration of the turn-on delay

Name:
ConfigOutput47

The duration of the switch-on pulse can be adjusted for the following switching units. The time set here is valid for the switch-on pulse for DO4.

Data type	Value	Information	Resolution
UINT	40 to 500	For 0.04 to 0.5 s. Bus controller default setting: 0	0.001 s

4.4.4.11 Switching response time of the power switch

Name:
ConfigOutput48

The actuation time of the generator power switch corresponds to the lead time of the switch-on command. The switch-on command is executed before the point of synchronization according to the amount of time defined here.

Data type	Value	Information	Resolution
UINT	40 to 300	For 0.04 to 0.3 s. Bus controller default setting: 0	0.001 s

4.4.4.12 Synchronization configuration

Name:
ConfigOutput56

Parameter for configuring which mains or voltages should be synchronized with each other.

This configuration makes it possible to synchronize the AC mains on terminal X4 either with terminal X3, X5 or X6. In each case, synchronization mains 1 (X4) is the network to which synchronization takes place.

Data type	Values	Bus controller default setting
UINT	See the bit structure.	0

Bit structure:

Bit	Description	Value	Information
0 - 1	Synchronization	00	X4 - X6: Synchronization network 1 - Synchronization network 2 (bus controller default setting)
		01	X4 - X5: Synchronization mains 1 - Busbar
		10	X4 - X3: Synchronization mains 1 - Generator
		11	Reserved
2 - 15	Reserved	-	

4.4.4.13 Dead bus voltage

Name:
ConfigOutput58

Configurable threshold for dead bus synchronization based on the nominal voltage of the busbar.

Data type	Value	Information	Resolution
UINT	0 to 1000	For 0 to 100% of U_{NomBus}. Bus controller default setting: 0	0.1%

4.4.5 Maximum value buffer and power meter

4.4.5.1 Pulse value of energy meter output

Name:
ConfigOutput46

Output DO2 outputs pulses that occur at a frequency proportional to the measured energy. The frequency of the pulses can be specified. The length of the pulse is 400 ms. The frequency at which the pulses occur should be set so that the duration between two pulses does not exceed 400 ms at the highest possible power. The pulse output's internal meter starts at 0 kWh after a restart. This register has no effect on the "ConfigOutput54" on page 37 and "ConfigOutput55" on page 37 registers.

Data type	Value	Information	Resolution
UINT	0 to 65535	For 0 to 65535 kWh/pulse. Bus controller default setting: 0	1 kWh/pulse

4.4.5.2 Maximum value buffer and meter buffer

These registers are used for nonvolatile storage of the maximum value and meter level values. After restarting, the stored maximum values and meter states are loaded back into their registers and the module's internal work meter is reset. It is possible to reset or write to the stored maximum values and meter states using an acyclic register.

The maximum values are recorded by the effective measured values before reaching the configurable filter. The maximum values can be read or written to as acyclic registers.

4.4.5.2.1 Maximum phase current

Name:
Reading: ConfigOutput49 (generator I1)
Reading: ConfigOutput50 (generator I2)
Reading: ConfigOutput51 (generator I3)
Reset: ConfigOutput60 (generator I1)
Reset: ConfigOutput61 (generator I2)
Reset: ConfigOutput62 (generator I3)

Data type	Value	Information	Resolution
INT	-32768 to 32767	-	1 A

4.4.5.2.2 Maximum total active power

Name:
Reading: ConfigOutput52
Reset: ConfigOutput63

Data type	Value	Information	Resolution
INT	-32768 to 32767	-	1 kW

4.4.5.2.3 Maximum neutral conductor current

Name:
Reading: ConfigOutput53
Reset: ConfigOutput64

Data type	Value	Information	Resolution
INT	-32768 to 32767	-	1 A

4.4.5.2.4 Active energy counter

Name:
Reading: ConfigOutput54
Writing: ConfigOutput66

Data type	Value	Information	Resolution
DINT	-2,147,483,648 to 2,147,483,647	-	100 kWh

4.4.5.2.5 Reactive energy counter

Name:
Reading: ConfigOutput55
Writing: ConfigOutput67

Data type	Value	Information	Resolution
DINT	-2,147,483,648 to 2,147,483,647	-	100 kvarh

4.5 Communication registers

4.5.1 General registers

4.5.1.1 Digital outputs

Name:
DigitalOutput
DigitalOutput05
DigitalOutput06

(data point applied as BOOL)

Data type	Values
USINT	See the bit structure.

Bit structure:

Bit	Description	Value	Information
0	DigitalOutput05	0	Reset output 5
		1	Set output 5
1	DigitalOutput06	0	Reset output 6
		1	Set output 6

4.5.1.2 Status of digital outputs

Name:
StatusDigitalOutput01 to StatusDigitalOutput06
StatusInput16 to StatusInput17

(data point applied as BOOL)

Data type	Values
USINT	See the bit structure.

Bit structure:

Bit	Description	Value	Information
0	StatusDigitalOutput01	0	Current state of output 1 = LOW
		1	Current state of output 1 = HIGH
1 - 7	Reserved	-	
8	StatusDigitalOutput02	0	Current state of output 2 = LOW
		1	Current state of output 2 = HIGH
...		...	
12	StatusDigitalOutput06	0	Current state of output 6 = LOW
		1	Current state of output 6 = HIGH
13	Reserved	-	
14	StatusInput17	0	Status DO OK
		1	Status DO overload
15	StatusInput16	0	Status 24 V output supply OK
		1	Status 24 V output supply undervoltage

4.5.1.3 Error register

Name:
StatusInput18
StatusInput01 to StatusInput15

This register contains status inputs (type BOOL).

Data type	Values
UINT	See the bit structure.

Bit structure:

Bit	Description	Value	Information
0	StatusInput01	0	Overvoltage (of one phase) OK
		1	Overvoltage (of one phase) present
1	StatusInput02	0	Undervoltage (of one phase) OK
		1	Undervoltage (of one phase) present
2	StatusInput03	0	Overfrequency OK
		1	Overfrequency present
3	StatusInput04	0	Underfrequency OK
		1	Underfrequency present
4	StatusInput05	0	Voltage unbalance OK
		1	Voltage unbalance present
5	StatusInput06	0	Current unbalance OK
		1	Current unbalance present
6	StatusInput07	0	Maximum neutral current OK
		1	Maximum neutral current exceeded
7	StatusInput08	0	Short-circuit current OK
		1	Short-circuit current present
8	StatusInput09	0	Dependent overcurrent OK
		1	Dependent overcurrent present
9	StatusInput10	0	Capacitive reactive power (exciter failure) OK
		1	Capacitive reactive power (exciter failure) present
10	StatusInput11	0	Ready, OK
		1	Not ready
11	StatusInput12	0	Phase 1 of generator network OK
		1	Phase 1 of generator network failure
12	StatusInput13	0	Phase 1 of busbar OK
		1	Phase 1 of busbar failure
13	StatusInput14	0	Phase 1 of synchronization network 1 OK
		1	Phase 1 of synchronization network 1 failure
14	StatusInput15	0	Phase 1 of synchronization network 2 OK
		1	Phase 1 of synchronization network 2 failure
15	Reserved	-	

StatusInput11

Error message "Not ready" is triggered if the X20 I/O power supply drops below 18 VDC.

StatusInput

(StatusInput12 to StatusInput 14)

Phase failure is detected if phase 1 of the respective terminal fails.

If this error occurs, it will mean losses in measurement precision.

4.5.2 Generator mains measured values

4.5.2.1 Phase currents of the generator

Name:
AnalogInput01 (I1)
AnalogInput02 (I2)
AnalogInput03 (I3)

Phase currents of the generator

Data type	Value	Information	Resolution
INT	-32768 to 32767	-	1 A

4.5.2.2 Current average of generator I1, I2, I3

Name:
AnalogInput04

Data type	Value	Information	Resolution
INT	-32768 to 32767	-	1 A

4.5.2.3 Neutral conductor current of generator I_n

Name:
AnalogInput05

Data type	Value	Information	Resolution
INT	-32768 to 32767	-	1 A

4.5.2.4 Dynamic current average of generator (I_{m_dyn})

Name:
AnalogInput06

Describes the change to the current average.

The dynamic average is the amount of change (I_{m_diff}) of the current average (sampling time: 10 ms).

This value decays in an e-function.

$I_{m_diff} > I_{m_dyn} \rightarrow I_{m_dyn} = I_{m_diff}$

$I_{m_diff} \leq I_{m_dyn} \rightarrow I_{m_dyn} = I_{m_dyn} * 0.98$

Data type	Value	Information	Resolution
UINT	0 to 65,535	-	1 A

4.5.2.5 Line-to-line voltages of the generator

Name:
AnalogInput07 (UG12)
AnalogInput08 (UG23)
AnalogInput09 (UG31)

Data type	Value	Information	Resolution
INT	-32768 to 32767	-	1 V

4.5.2.6 Phase voltages of the generator

Name:
AnalogInput10 (UG 1)
AnalogInput11 (UG 2)
AnalogInput12 (UG 3)

Data type	Value	Information	Resolution
INT	-32768 to 32767	-	1 V

4.5.2.7 Generator power: Total active power P

Name:
AnalogInput19

Filtered generator power values:

Data type	Value	Information	Resolution
INT	-32768 to 32767	-	1 kW

4.5.2.8 Generator power: Total reactive power Q

Name:
AnalogInput20

Filtered generator power values:

Data type	Value	Information	Resolution
INT	-32768 to 32767	-	1 kvar

4.5.2.9 Generator power: Total apparent power S

Name:
AnalogInput21

Filtered generator power values:

Data type	Value	Information	Resolution
INT	-32768 to 32767	-	1 kVA

4.5.2.10 Voltage average of the generator

Name:
AnalogInput22

Voltage average of the generator UG12, UG23, UG31 (U~3 average)

Data type	Value	Information	Resolution
INT	-32768 to 32767	-	1 V

4.5.2.11 Power factor of generator/cos ϕ

Name:
AnalogInput23

Data type	Value	Information	Resolution
INT	-32768 to 32767	-	0.001

4.5.2.12 Frequency of the generator mains

Name:
AnalogInput24

Data type	Value	Information	Resolution
UINT	0 to 65,535	-	0.01 Hz

4.5.3 Busbar measured values

4.5.3.1 Line-to-line voltages of the busbar

Name:
AnalogInput13 (UB12)
AnalogInput14 (UB23)
AnalogInput15 (UB31)

Data type	Value	Information	Resolution
INT	-32768 to 32767	-	1 V

4.5.3.2 Phase voltages of the busbar

Name:
AnalogInput16 (UB1)
AnalogInput17 (UB2)
AnalogInput18 (UB3)

Data type	Value	Information	Resolution
INT	-32768 to 32767	-	1 V

4.5.4 Synchronization mains measured values

4.5.4.1 Line-to-line voltages

Name:
AnalogInput25 (synchronization network 1 US1)
AnalogInput26 (synchronization network 2 US2)

Data type	Value	Information	Resolution
INT	-32768 to 32767	-	1 V

4.5.4.2 Frequencies

Name:
AnalogInput27 (synchronization network 1)
AnalogInput28 (synchronization network 2)

Data type	Value	Information	Resolution
UINT	0 to 65,535	-	0.01 Hz

4.5.4.3 Differential angle between synchronization networks

Name:
AnalogInput29

Angular difference between the networks being synchronized.

Specifies by how many degrees the synchronization network is ahead of the network to be synchronized.

Data type	Values	Information	Resolution
INT	-32768 to 32767	-	0.1°

4.5.4.4 Differential voltage between synchronization networks

Name:
AnalogInput30

Differential voltage between the networks being synchronized.

Data type	Value	Information	Resolution
INT	-32768 to 32767	-	1 V

4.6 Minimum cycle time

The minimum cycle time specifies how far the bus cycle can be reduced without communication errors occurring. It is important to note that very fast cycles reduce the idle time available for handling monitoring, diagnostics and acyclic commands.

Minimum cycle time
≥ 250 µs

4.7 Minimum I/O update time

The minimum I/O update time for the analog inputs depends on the respective period duration of the measurement signal frequency.

	Minimum I/O update time
At 50 Hz	20 ms