SGD 43-A

4.3" PanelPilotACE Compatible Display

SGD 43-A is a 4.3" capacitive touch display designed for use with PanelPilotACE Design Studio, a free drag-and-drop style software package for rapid development of advanced user interfaces and panel meters.



The SGD 43-A is part of the PanelPilotACE range of compatible displays and panel meters. The low-profile display features a 4.3" capacitive touch screen and an ARM 9 processor running embedded Linux. The display can be powered from either USB or a 5 to 30V d.c. supply and offers users a wealth of hardware interfaces which include four 16bit bi-polar analogue inputs (to a maximum of ±40V d.c.), eight digital input/output pins, two alarm outputs (maximum current sink 10mA) and four 8bit PWM outputs.

Users program the display using the free PanelPilotACE Design Studio software which allows the creation of anything from simple meters and dials, through to advanced user interfaces with control elements.

Specifications

Display	4.3" TFT with 262k colours
Touchscreen	Capacitive
Resolution	480 x 272px
Processor	Freescale i.MX283 (454MHz, 32bit, ARM 9)
Analogue Inputs	4 x ±40V or 4-20mA (16bit ADC with 0.05% ±1mV typical accuracy*)
Digital I/O	8 x DIO, 2 x open-collector alarm outputs, 4 x 8 bit PWM outputs
Serial Buses	RS232, SPI**, I2C**
Expansion Boards* **	RS485, Ethernet
Memory	1Gbit DDR2 SDRAM and 2GB SD card
Operating Temperature	0 to 40°C (32 to 104°F)
Supply	5 to 30V d.c. (400mA typical at 5V d.c.)
Outside Dimensions	119.3 (4.7) x 79.8 (3.1) x 20.0 (0.8) mm (in)

* For measurement ranges up to ±10V. ** Not currently available in Design Studio. *** Add-on boards sold separately.

SGD 43-A

4.3" PanelPilotACE Compatible Display

PanelPilotACE Design Studio



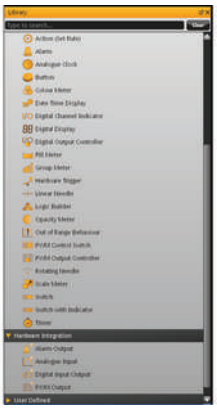



Code-Free development for industrial display projects

The PanelPilotACE Design Studio software provides a number of building blocks which allow users to drag-and-drop elements onto the screen to quickly create advanced display interfaces. From images to text elements, analogue style meters, touch screen navigation elements, logic statements, data logging, trend graphing and even complex maths, users can build up multi-screen interfaces without needing to write a line of code.

There is a library of pre-defined elements such as meters, buttons and switches, and users can create their own content by combining elements or importing graphics in a number of formats (including jpg, png, tif, bmp and gif). The software includes support for transparency and multiple layers.

Hardware interfacing is similarly intuitive, with hardware elements being dragged into a function builder where associations with graphical elements (such as a needle on a meter) can be defined. Here users can determine scaling for analogue inputs, define alarm triggers, behaviours for digital inputs and outputs and configure PWM outputs.

PID Control:

Use your display as a PID control unit. Set P, I and D coefficients, measure a process variable and use PanelPilotACE to correct to your desired set point.

Ethernet FTP for Logged Data:

Connect your display to an FTP server via an Ethernet cable allowing quicker and more convenient data collection.

Multi-Channel Data Logging:

10 logging channels allowing logging of any input to the device that can be defined numerically.

Trend Graphs:

Display data on graphs as it is logged. If you use an alarm threshold as one of your data channels, monitor logged data against alarm levels.

Previewing and Uploading Projects

The software includes a 'Preview in Emulator' function which emulates the hardware's inputs and outputs, allowing users to test their projects prior to upload. Projects are uploaded to the SGD 43-A via a mini USB port.

PanelPilotACE Design Studio is compatible with Windows 7, 8 and 10, and can be downloaded free from www.lascarelectronics.com/software/panelpilotace.

SGD 43-A

4.3" PanelPilotACE Compatible Display

Dimensions

All dimensions are in mm (in)

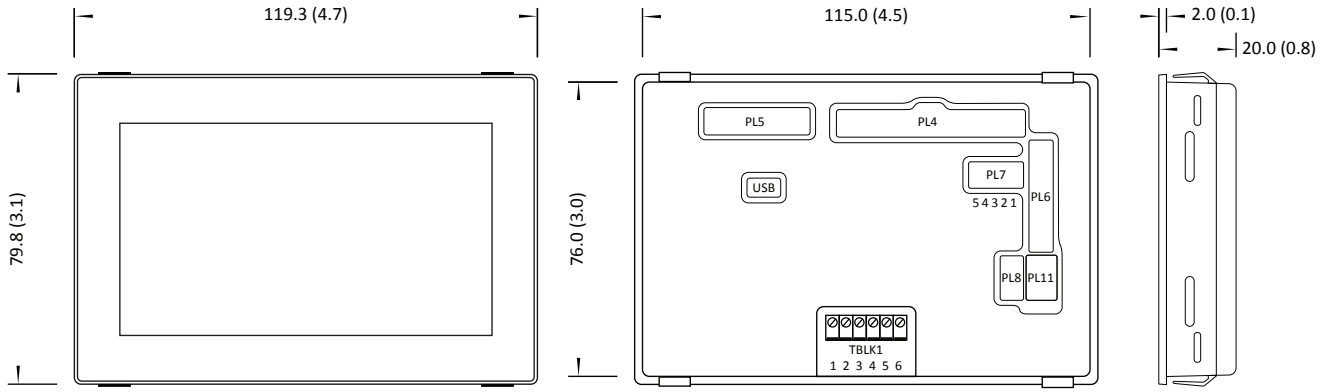

Panel Cut-Out and Fitting

The panel cut-out is 117.0 x 78.0mm (4.6" x 3.07"). There are two mounting methods:

The first uses clips that protude from the plastic assembly and is suitable for panels between 1 and 3mm (0.04" and 0.12") in thickness.

The second method uses a rear mounting plastic bracket featuring grub screws for a more secure and adaptable fit. This second mounting method is suitable for panels between 0.5 and 4.0mm (0.01" and 0.15") in thickness.

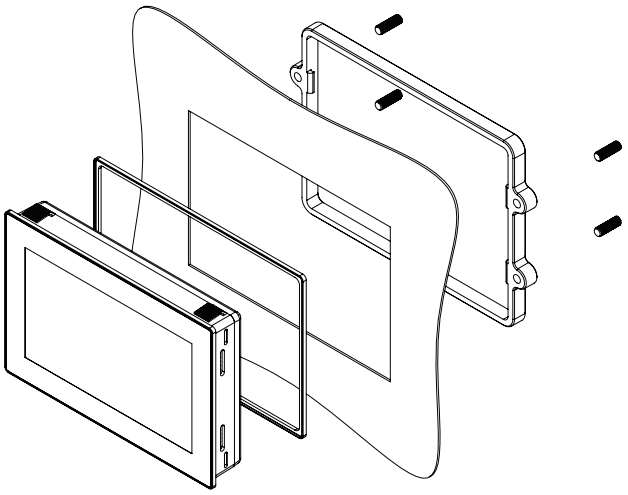

SGD 43-A

4.3" PanelPilotACE Compatible Display

Pin Out

TBLK1: Power & Analogue Inputs

Pin Number	Function
1	Supply Voltage (V+)
2	0V
3	Analogue Input 4 (IN4)
4	Analogue Input 3 (IN3)
5	Analogue Input 2 (IN2)
6	Analogue Input 1 (IN1)

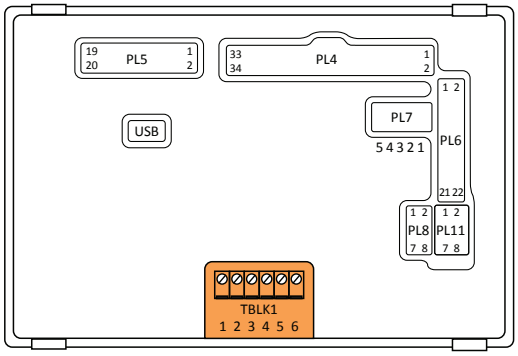

PL11: Analogue Inputs

Pin Number	Function
1	Analogue Input 1 (IN1)
2	0V
3	Analogue Input 2 (IN2)
4	0V
5	Analogue Input 3 (IN3)
6	0V
7	Analogue Input 4 (IN4)
8	0V

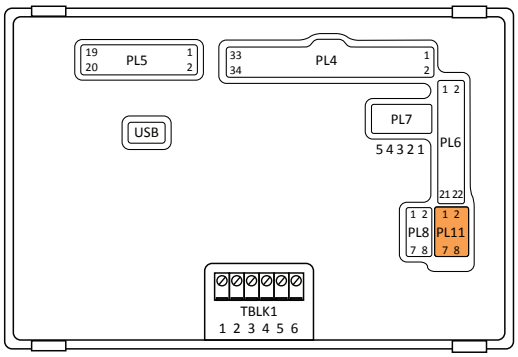

PL8: 4-20mA Current Loop Measurement

Pin Number	Function
1-2	4-20mA current loop measurement (IN1) when shorted
3-4	4-20mA current loop measurement (IN2) when shorted
5-6	4-20mA current loop measurement (IN3) when shorted
7-8	4-20mA current loop measurement (IN4) when shorted

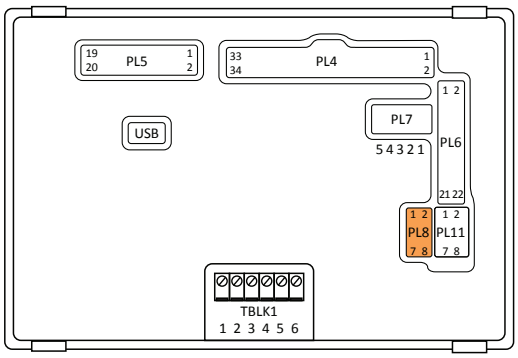

SGD 43-A

4.3" PanelPilotACE Compatible Display

Pin Out (continued...)

PL4: Alarms, Serial Input and Digital I/O

Pin Number	Function
1	0V
2	Supply Voltage (V+)
3	Alarm 1 (ALM1)
4	Alarm 2 (ALM2)
5	I2C0 SCL
6	I2C0 SDA
7	SPI SS1
8	SPI MOSI
9	SPI MISO
10	SPI SCK
11	Digital I/O Channel 1 (DIG1)
12	Digital I/O Channel 2 (DIG2)
13	Digital I/O Channel 3 (DIG3)
14	Digital I/O Channel 4 (DIG4)
15	Digital I/O Channel 5 (DIG5)
16	Digital I/O Channel 6 (DIG6)
17	Digital I/O Channel 7 (DIG7)
18	Digital I/O Channel 8 (DIG8)*
19	PWM Channel 1 (PWM1)*
20	PWM Channel 2 (PWM2)*
21	PWM Channel 3 (PWM3)*
22	PWM Channel 4 (PWM4)

PWM1 and PWM2 cannot be used if you are using RS485.
DIG8 and PWM3 use is restricted if you are using RS485.
See also the S43-RS485 datasheet, available from
https://www.lascarelectronics.com/panelpilot-s43-rs485/

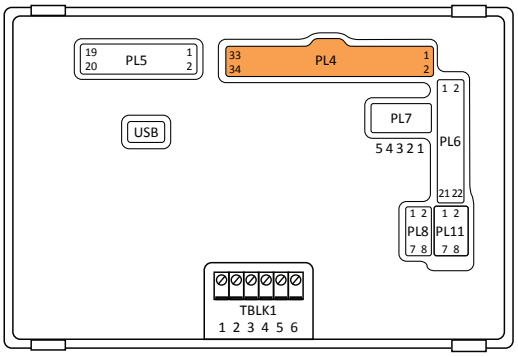

23	DUART TX (for internal use)
24	DUART RX (for internal use)
25	USB D+
26	USB D-
27	I2C1 SDA (for internal use)
28	I2C1 SCL (for internal use)
29	+5V Output Voltage
30	High Speed ADC
31	+3V3 Output Voltage
32	0V
33	Shorted together to enable firmware upgrade
34	

PL7: RS232 Interface

Pin Number	Function
1	TX
2	RTS
3	RX
4	CTS
5	0V

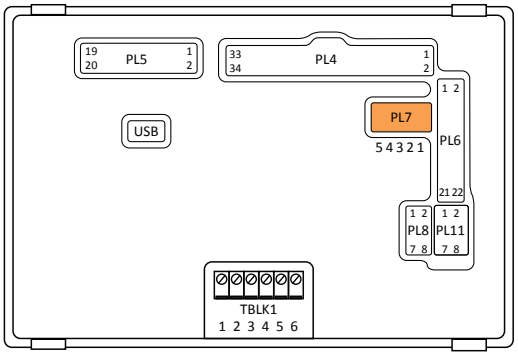

Pin Out (continued...)

PL6: Ethernet & Expansion I/O

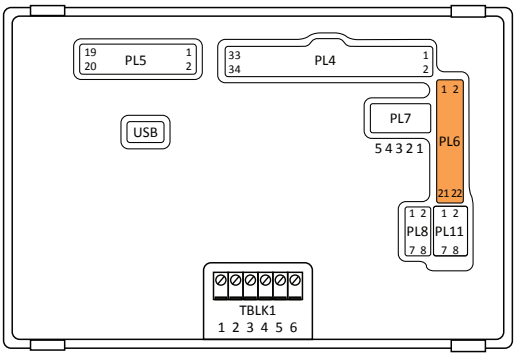

Pin Number	Function
1	ENT CLK
2	ENT MDC
3	ENT MDIO
4	ENT RXD0
5	ENT RXD1
6	ENT RX EN
7	ENT TXD0
8	ENT TXD1
9	ENT TX EN
10	Digital I/O 9 (expansion)
11	Digital I/O 10 (expansion)
12	Digital I/O 11 (expansion)
13	Digital I/O 12 (expansion)
14	Digital I/O 13 (expansion)
15	Digital I/O 14 (expansion)
16	Digital I/O 15 (expansion)
17	Digital I/O 16 (expansion)
18	Digital I/O 17 (expansion)
19	+5V
20	0V
21	External Module Hardware ID
22	External Module Hardware ID

PL5: Factory Programming Interface (JTAG)

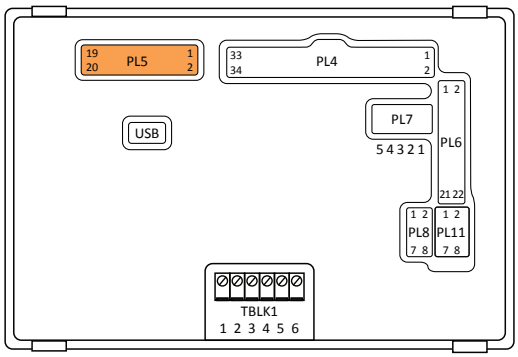

Various Operating Modes

Supply Voltage

Supply to the display module can be connected to either the screw terminals (TBLK1), pins (PL4), or the mini-USB connector.

For best results, ensure the power supply is free from electrical noise.

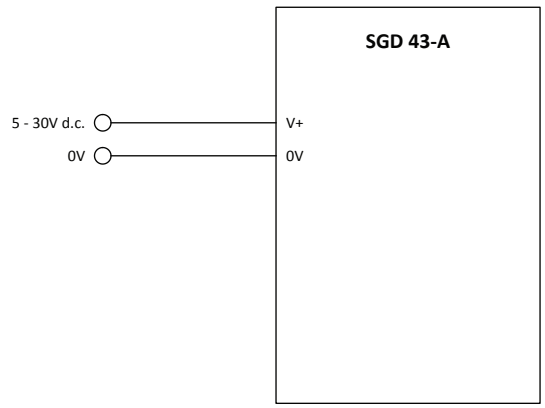

Supply Voltage	Screw Terminals (TBLK1)	Pin (PL4)
V+	1	2
0V	2	1

Measuring an Analogue Voltage

An analogue voltage can be connected to either the screw terminals (TBLK1) or pins (PL11).

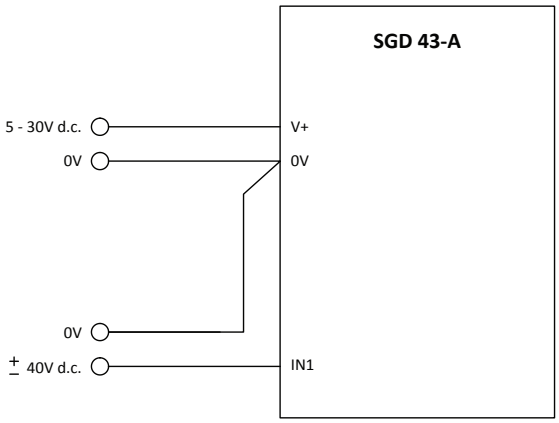

Analogue Input		Screw Terminals (TBLK1)	Pin (PL11)
1	IN1	6	1
	0V	2	2
2	IN2	5	3
	0V	2	4
3	IN3	4	5
	0V	2	6
4	IN4	3	7
	0V	2	8

To minimise offsets it is best practice to connect analogue grounds directly to the meter pins (PL11) or screw terminals (TBLK1).

The SGD 43-A uses a programmable gain amplifier (PGA) together with a 16-bit analogue to digital converter (ADC) for its analogue voltage measurements. The PGA is automatically set when the analogue range of a channel is input into the PanelPilotACE Design Studio.

The table to the right shows the maximum resolution of the SGD 43-A's analogue measurements across a number of voltage ranges.

Analogue Input	Resolution
±1.25V	0.04mV
±2.5V	0.08mV
±5V	0.16mV
±10V	0.33mV
±20V	0.66mV
±40V	1.3mV

Various Operating Modes (continued...)

Measuring a 4-20mA Current

The 4-20mA signal should be connected as for "Measuring an Analogue Voltage" but a jumper link should be placed across pins PL8 for each analogue channel being used:

Analogue Voltage	Jumper link (PL8)
IN1	1 & 2
IN2	3 & 4
IN3	5 & 6
IN4	7 & 8

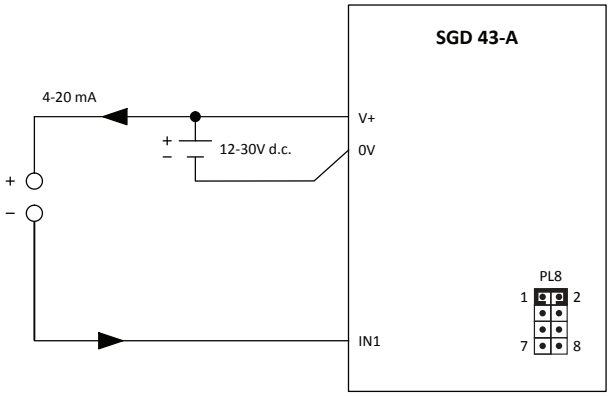

Scaling: The sense resistors used are 110Ω. Therefore in software scaling 4mA equates to 0.44V and 20mA equates to 2.2V.

Note: transmitter terminals (+ or -) must be isolated from the power supply.

Driving an Alarm Output

The alarm outputs are open-collector. When an alarm is active, the output can sink up to 10mA.

Alarm outputs are connected via PL4:

Alarm Output	Pin (PL4)
ALM1	3
ALM2	4

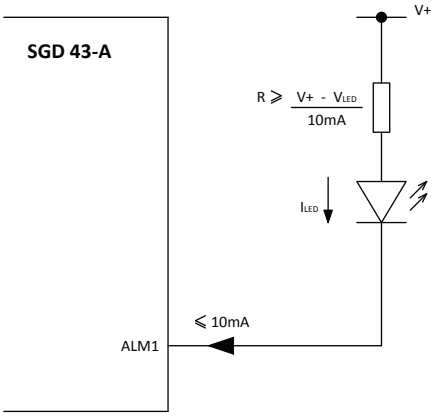

Driving an LED using alarm output

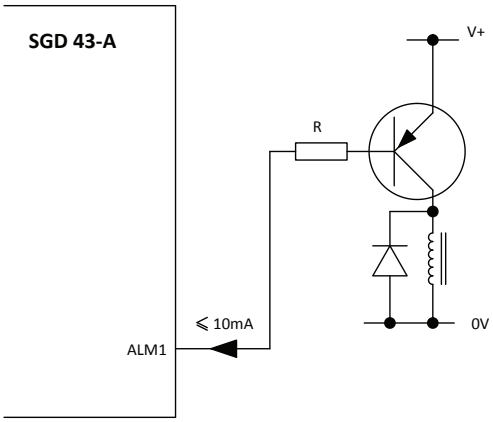

Driving a relay using alarm output

Various Operating Modes (continued...)

Using Digital Input/Output Pins

Digital inputs/outputs are connected via PL4:

Digital I/O	Pin (PL4)
DIG1	11
DIG2	12
DIG3	13
DIG4	14
DIG5	15
DIG6	16
DIG7	17
DIG8	18

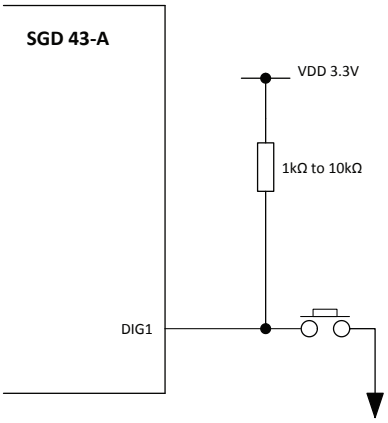

Generating a digital input with a push button

The characteristics of the digital I/O pins are as follows:

Parameter	Min	Max	Unit
Input voltage (high)	2	3.3	V
Input voltage (low)	0	0.8	V
Output voltage (high)	2.6	3.3	V
Output voltage (low)	0	0.4	V
Output source current	-11.4	-	mA
Output sink current	9.0	-	mA

Absolute Maximum ratings:

Parameter	Min	Max	Unit
Input voltage relative to ground	-0.3	3.6	V

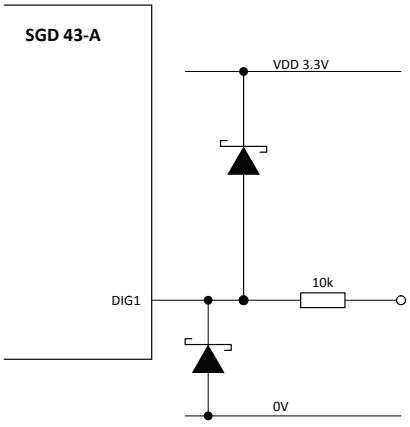

Protection circuit for digital I/O

For maximum flexibility in accommodating external add-on boards and interfacing to external circuits, the digital I/O pins connect directly to the microcontroller and do not contain any buffering or protection circuitry. Take care not to exceed the maximum ratings, otherwise the unit may be permanently damaged.

If there is a risk that inputs may exceed these values, then voltage limiting must be used (example circuit above). Note that the protection diodes must be of the Schottky type and not regular silicon diodes.

Various Operating Modes (continued...)

Using PWM Output

If the SGD 43-A is configured to have PWM output, it can be used to drive a buzzer or produce a simple digital-to-analogue converter.

The PWM outputs are connected via PL4:

PWM Output	Pin (PL4)
PWM1	19
PWM2	20
PWM3	21
PWM4	22

The characteristics of the PWM output pins are as follows:

Parameter	Min	Max	Unit
Voltage	0	3.3	V
Output source current (PWM)	-9.5	-	mA
Output sink current (PWM)	7.7	-	mA

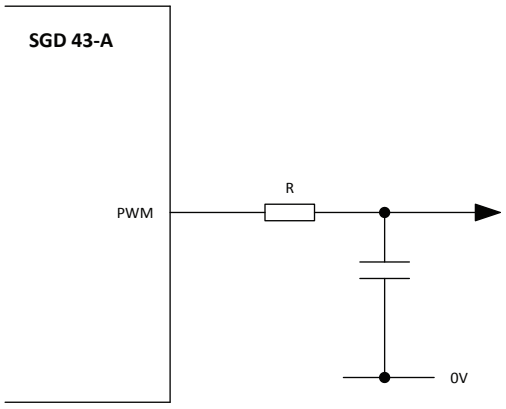

Using PWM output to convert digital to analogue

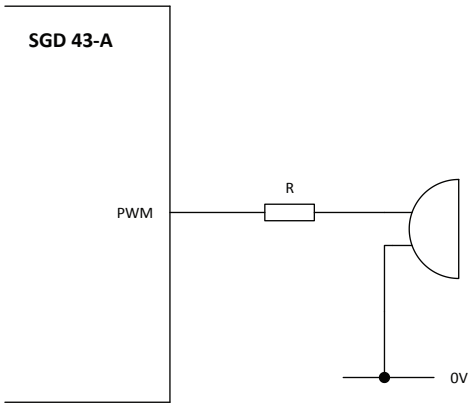

Using PWM output to drive a buzzer

Various Operating Modes (continued...)

Using RS232 Serial Inteface

The serial interface is EIA/TIA-232 compatible and can operate directly with other RS232 devices

The RS232 serial pins are connected via PL7:

Pin Number	Function
1	TX
2	RTS
3	RX
4	CTS
5	0V

The characteristics of the RS232 serial pins are as follows:

Parameter	Min.	Typ.	Max.	Unit
Receiver input range (RTS, CTS)	-25		25	V
Input threshold low	0.6	1.2		V
Input threshold high		1.5	2.4	V
Input hysteresis		0.3		V
Input resistance	3	5	7	kΩ
Transmitter output voltage swing	±5.0	±5.4		V
Output short circuit current		±35	±60	mA

For more information on configuring your device, visit our YouTube channel **www.youtube.com/panelpilot** for tutorials or the PanelPilot University **www.lascarelectronics.com/panelpilotace-university**