VARIMETER
Undervoltage Relay
BA 9043, AA 9943

0221539

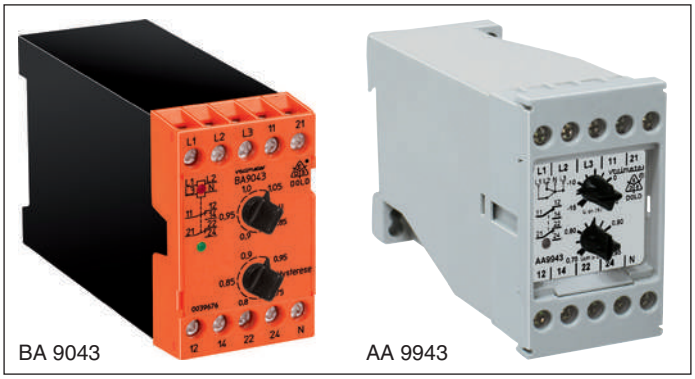

- According to EC/EN 60255-1
- 3-phase
- For nominal voltage of 3 AC 100 / 57 to 690 / 400 V
- Measures arithmetic mean value
- Adjustable operate and release value
- For 3p3w or 3p4w systems
- BA 9043 with optionally adjustable time delay
- De-energized on trip operation
- LED indicator for operation and state of contact
- Insensitive to harmonics
- Frequency up to 400 Hz
- Width 45 mm

Function Diagram

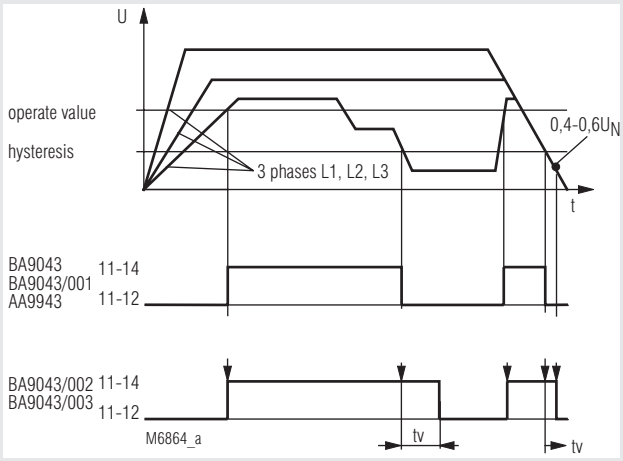

Approvals and Markings

*) see variants

Application

- Undervoltage detection in 3 phase systems
- For industrial and railway applications

Indicators

upper LED (only BA 9043): on, when voltage connected

lower LED: on, when output contact activated

Notes

For determination of the arithmetic mean value of the voltage the 3 phases are measured against N.
The variants without N (/001 and /003) measure L1 and L2 against L3.
delay the delay is only active at U ≥ 0,6 U_N . At < 0.4 U_N the relay switches off without delay.

Circuit Diagrams

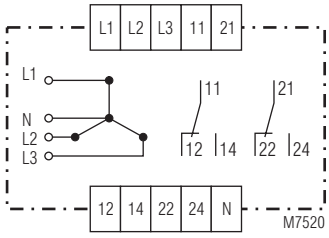

BA 9043, BA 9043/002
AA 9943

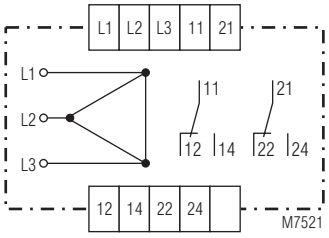

BA 9043/001, BA 9043/003
AA 9943/001

Technical Data

Input

Nominal voltage U_N
BA 9043, BA 9043/002
AA 9943: 3/N AC 100/57 V; 220/127 V; 400/230 V 415/240 V; 440/254 V; 500/290 V
BA 9043, BA9043/002: 3/N AC 690/400 V
BA 9043/001, BA 9043/003,
AA 9943/001: 3 AC 100 V; 220 V; 400 V; 415 V, 440 V; 500 V
BA 9043/001, BA 9043/003: 3 AC 690 V

Max. overload
BA 9043: 1.2 U_N continuously
AA 9943: 1.1 U_N continuously

Nominal consumption: AC 4 VA
Nominal frequency: 50 ... 400 Hz
Frequency range: ± 5 %
Temperature influence: < 0.05 % / K

Setting Ranges

Response value: 0.85 ... 1.05 U_N, infinite variable with upper potentiometer
Hysteresis: 0.75 ... 0.95 of operate value
Setting accuracy: ≤ ± 10 %
Switching delay t_M: see diagram switching delay
Time delay t_v: infinite variable from 0.5 ... 10 sec for BA 9043/002, BA 9043/003
Between 0.4 and 0.6 U_N the contacts fall back according to the diagram without additional delay

All technical data in this list relate to the state at the moment of edition. We reserve the right for technical improvements and changes at any time.

Technical Data

Output

Contacts

BA 9043:	2 changeover contacts	
AA 9943.11:	1 changeover contact	
AA 9943.12:	2 changeover contacts	
Thermal current I_{th}:	6 A; see diagramm Continuous current limit curve	
Switching capacity		
to AC 15		
NO contact:	3 A / AC 230 V	IEC/EN 60 947-5-1
NC contact:	1 A / AC 230 V	IEC/EN 60 947-5-1
to DC 13		
NO contact:	1 A / DC 24 V	IEC/EN 60 947-5-1
NC contact:	1 A / DC 24 V	IEC/EN 60 947-5-1
Electrical life		IEC/EN 60 947-5-1
to AC 15 at 3 A, AC 230 V:	3 x 10^5 switching cycles	
Short circuit strength		
max. fuse rating:	4 A gL	IEC/EN 60 947-5-1
Mechanical life:	> 30 x 10^6 switching cycles	

General Data

Operating mode:	Continuous operation	
Temperature range		
Operation:	- 20 ... + 60°C	
Storage:	- 25 ... + 60°C	
Altitude:	< 2.000 m	
Clearance and creepage distances		
rated impulse voltage / pollution degree:	4 kV / 2	IEC 60 664-1
EMC		
Electrostatic discharge:	8 kV (air)	IEC/EN 61 000-4-2
HF irradiation		
80 MHz ... 1 GHz:	10 V/m	IEC/EN 61 000-4-3
1 GHz ... 2.5 GHz:	3 V/m	IEC/EN 61 000-4-3
2.5 GHz ... 2.7 GHz:	3 V/m	IEC/EN 61 000-4-3
Fast transients:	2 kV	IEC/EN 61 000-4-4
Surge voltages between		
wires for power supply:	1 kV	IEC/EN 61 000-4-5
between wire and ground:	2 kV	IEC/EN 61 000-4-5
HF wire guided:	10 V	IEC/EN 61 000-4-6
Interference suppression:	Limit value class B	EN 55 011
Degree of protection		
Housing:	IP 40	IEC/EN 60 529
Terminals:	IP 20	IEC/EN 60 529
Housing:	Thermoplastic with V0 behaviour according to UL subject 94	
Vibration resistance:	Amplitude 0.35 mm frequency 10 ... 55 Hz	IEC/EN 60 068-2-6
Climate resistance:	20 / 060 / 04	IEC/EN 60 068-1
Terminal designation:	DIN EN 50 005	
Wire connection:	2 x 2.5 mm² solid or 2 x 1.5 mm² stranded wire with sleeve DIN 46 228-1/-2/-3/-4	
Wire fixing:	Flat terminals with self-lifting clamping piece	IEC/EN 60 999-1
Fixing torque:	0.8 Nm	
Mounting:	DIN rail	IEC/EN 60 715
Weight		
BA 9043:	310 g	
AA 9943:	300 g	

Dimensions

Width x height x depth	
BA 9043:	45 x 73 x 132 mm
AA 9943:	45 x 77 x 127 mm

CCC-Data

Thermal current I_{th}: 5 A

Switching capacity

to AC 15:	2 A / AC 230 V	IEC/EN 60 947-5-1
to DC 13:	1 A / DC 24 V	IEC/EN 60 947-5-1

Technical data that is not stated in the CCC-Data, can be found in the technical data section.

Classification to DIN EN 50155 for BA 9043

Vibration and shock resistance:	Category 1, Class B	IEC/EN 61 373
Ambient temperature:	T1 compliant T2, T3 and TX with operational limitations	
Protective coating of the PCB:	No	

Standard Type

BA 9043 3/N AC 400 / 230 V 50 ... 400 Hz
Article number: 0039676

- for 3p4w systems
- Nominal voltage U_N: 3/N AC 400 / 230 V
- Output: 2 changeover contacts
- Width: 45 mm

Variants

AA 9943/001:	without neutral
AA 9943/175:	for nuclear power plants
BA 9043/001:	without neutral
BA 9043/002:	with neutral, adjustable time delay t_v = 0.5 ... 10 sec
BA 9043/003:	without neutral, adjustable time delay t_v = 0.5 ... 10 sec
BA 9043:	with CCC-approval on request

Ordering example for variants

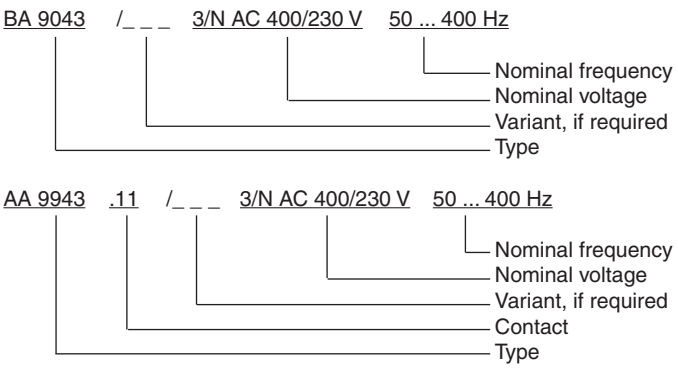

Accessories

AA 9943:

K 70-34	Cover Article number: 0011790

Characteristics

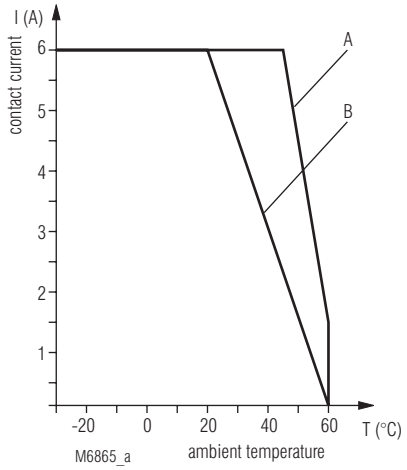

Continuous current limit curve

A = Devices mounted with 2 cm distance
B = Devices mounted without distance

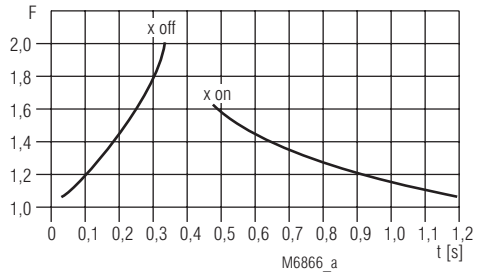

Diagram switching delay

Switching delay t_M:

When the voltage changes fast on the measuring input, the arithmetic mean value can only adjust after a short delay.

Example:

$$F = \frac{\text{U applied}}{\text{U setting}} \qquad F = \frac{240\ \text{V}}{190\ \text{V}} = 1.26$$

U setting = 190 V
U applied = 240 V

according to diagram:
$t_M$on = approx. 800 ms
$t_M$off = approx. 100 ms