

Model Number

OBR7500-R100-2EP-IO-V31

Retroreflective sensor
with 4-pin, M8 x 1 connector

Features

- Miniature design with versatile mounting options
- Extended temperature range -40°C ... 60°C
- High degree of protection IP69K
- IO-link interface for service and process data

Product information

The R100 series miniature optical sensors are the first devices of their kind to offer an end-to-end solution in a small single standard design — from thru-beam sensor through to a distance measurement device. As a result of this design, the sensors are able to perform practically all standard automation tasks.
The entire series enables sensors to communicate via IO-Link.
The DuraBeam laser sensors are durable and can be used in the same way as a standard sensor.
The use of Multi Pixel Technology gives the standard sensors a high level of flexibility and enables them to adapt more effectively to their operating environment.

Dimensions

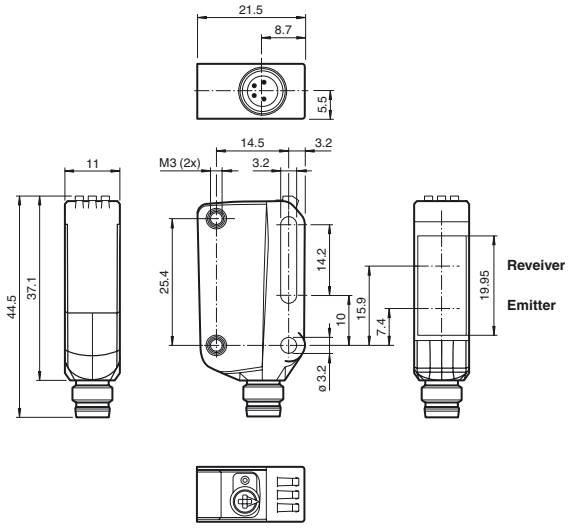

Electrical connection

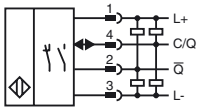

Pinout



Wire colors in accordance with EN 60947-5-2

1	BN	(brown)
2	WH	(white)
3	BU	(blue)
4	BK	(black)

Indicators/operating means

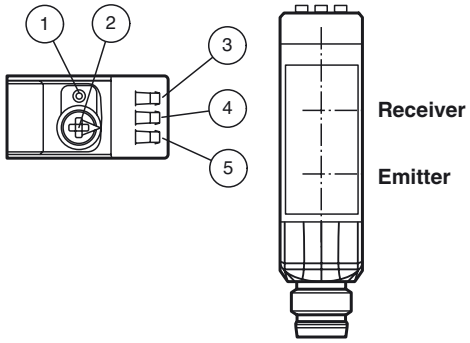

1	Light-on/Dark-on changeover switch
2	Sensitivity adjuster
3	Operating indicator / dark on
4	Signal indicator
5	Operating indicator / light on

Release date: 2016-04-18 11:25 Date of issue: 2016-04-18 267075-0119_eng.xml

Technical data

General specifications		
Effective detection range		0 ... 7.5 m
Reflector distance		0.03 ... 7.5 m
Threshold detection range		10 m
Reference target		H85-2 reflector
Light source		LED
Light type		modulated visible red light
LED risk group labelling		exempt group
Polarization filter		yes
Diameter of the light spot		approx. 65 mm at a distance of 1 m
Angle of divergence		3.7 °
Ambient light limit		EN 60947-5-2
Functional safety related parameters		
$MTTF_d$		724 a
Mission Time (T_M)		20 a
Diagnostic Coverage (DC)		0 %
Indicators/operating means		
Operation indicator		LED green: constantly on - power on flashing (4Hz) - short circuit flashing with short break (1 Hz) - IO-Link mode
Function indicator		Yellow LED: Permanently lit—light path clear Permanently off—object detected Flashing (4 Hz)—operating reserve not reached
Control elements		Light-on/dark-on changeover switch
Control elements		sensitivity adjustment
Parameterization indicator		IO link communication: green LED goes out briefly (1 Hz)
Electrical specifications		
Operating voltage	U_B	10 ... 30 V DC
Ripple		max. 10 %
No-load supply current	I_0	< 25 mA at 24 V supply voltage
Protection class		III
Interface		
Interface type		IO-Link (via C/Q = pin 4)
Transfer rate		COM 2 (38.4 kBaud)
IO-Link Revision		1.1
Min. cycle time		2.3 ms
Process data witdh		Process data input 2 Bit Process data output 2 Bit
SIO mode support		yes
Device ID		0x110201 (1114625)
Compatible master port type		A
Output		
Switching type		The switching type of the sensor is adjustable. The default setting is: C/Q - Pin4: NPN normally open / dark-on, PNP normally closed / light-on, IO-Link /Q - Pin2: NPN normally closed / light-on, PNP normally open / dark-on
Signal output		2 push-pull (4 in 1)outputs, short-circuit protected, reverse polarity protected, overvoltage protected
Switching voltage		max. 30 V DC
Switching current		max. 100 mA , resistive load
Usage category		DC-12 and DC-13
Voltage drop	U_d	≤ 1.5 V DC
Switching frequency	f	1000 Hz
Response time		0.5 ms
Ambient conditions		
Ambient temperature		-40 ... 60 °C (-40 ... 140 °F)
Storage temperature		-40 ... 70 °C (-40 ... 158 °F)
Mechanical specifications		
Degree of protection		IP67 / IP69 / IP69K
Connection		M8 x 1 connector, 4-pin
Material		
Housing		PC (Polycarbonate)
Optical face		PMMA
Mass		approx. 10 g
Compliance with standards and directives		
Directive conformity		
EMC Directive 2004/108/EC		EN 60947-5-2:2007 + A1:2012
Standard conformity		
Product standard		EN 60947-5-2:2007 + A1:2012 IEC 60947-5-2:2007 + A1:2012

Accessories

IO-Link-Master02-USB
IO-Link master, supply via USB port or separate power supply, LED indicators, M12 plug for sensor connection

REF-H85-2
Reflector, rectangular 84.5 mm x 84.5 mm, mounting holes

REF-H50
Reflector, rectangular 51 mm x 61 mm, mounting holes, fixing strap

REF-VR10
Reflector, rectangular 60 mm x 19 mm, mounting holes

OFR-100/100
Reflective tape 100 mm x 100 mm

REF-H33
Reflector with screw fixing

V31-WM-2M-PUR
Female cordset, M8, 4-pin, PUR cable

V31-GM-2M-PUR
Female cordset, M8, 4-pin, PUR cable

Other suitable accessories can be found at www.pepperl-fuchs.com

Release date: 2016-04-18 11:25 Date of issue: 2016-04-18 267075-0119_eng.xml

Refer to “General Notes Relating to Pepperl+Fuchs Product Information”.
Pepperl+Fuchs Group www.pepperl-fuchs.com
USA: +1 330 486 0001 fa-info@us.pepperl-fuchs.com
Germany: +49 621 776 4411 fa-info@de.pepperl-fuchs.com
Singapore: +65 6779 9091 fa-info@sg.pepperl-fuchs.com
PEPPERL+FUCHS SENSING YOUR NEEDS

Standards	UL 60947-5-2: 2014 IEC 61131-9:2013 EN 62471:2008 EN 61131-9:2013

Approvals and certificates

UL approval	E87056 , cULus Listed , class 2 power supply , type rating 1

Curves/Diagrams

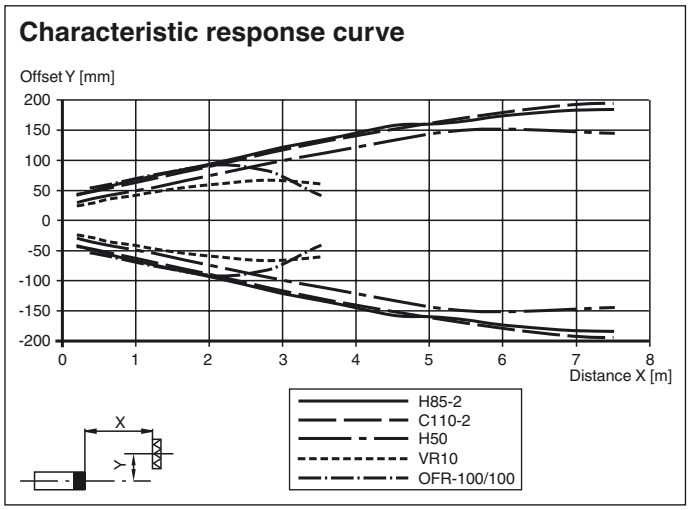

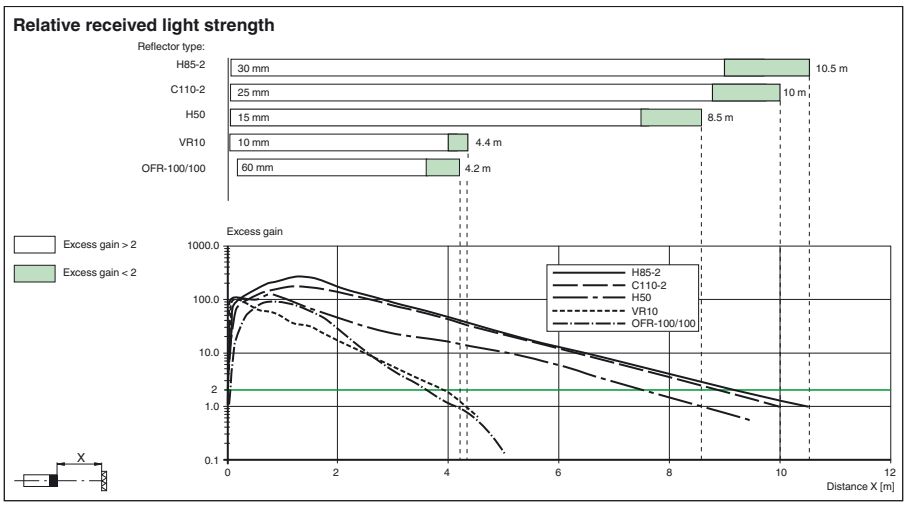

Functions and Operation

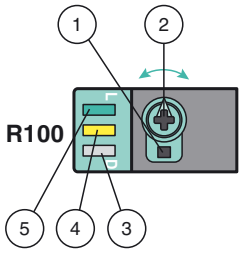

1 - Light-on / dark-on changeover switch
2 - Sensing range / sensitivity adjuster
3 - Operating indicator / dark on
4 - Signal indicator
5 - Operating indicator / light on

To unlock the adjustment functions turn the sensing range /sensitivity adjuster for more than 180 degrees.

Sensing Range / Sensitivity

Turn sensing range / sensitivity adjuster clockwise to increase sensing range / sensitivity.

Turn sensing range / sensitivity adjuster counter clockwise to decrease sensing range / sensitivity.

If the end of the adjustment range is reached, the signal indicator starts flashing with 8 Hz.

Light-on / Dark-on Configuration

Press the light-on / dark-on changeover switch for more than 1 second (less than 4 seconds). The light-on / dark-on mode changes and the operating indicators are activated accordingly.

Release date: 2016-04-18 11:25 Date of issue: 2016-04-18 267075-0119_eng.xml

If you press the light-on / dark-on changeover switch for more than 4 seconds, the light-on /dark-on mode changes back to the original setting. On release of the light-on / dark-on changeover switch the current state is activated.

Restore Factory Settings

Press the light-on / dark-on changeover switch for more than 10 seconds (less than 30 seconds) until all LEDs turn off. On release of the light-on / dark-on changeover switch the signal indicator turns on. After 5 seconds the sensor resumes operation with factory default settings.

After 5 minutes of inactivity the sensing range / sensitivity adjustment is locked. In order to reactivate the sensing range / sensitivity adjustment, turn the sensing range /sensitivity adjuster for more than 180 degrees.

Release date: 2016-04-18 11:25 Date of issue: 2016-04-18 267075-0119_eng.xml

Refer to “General Notes Relating to Pepperl+Fuchs Product Information”.
Pepperl+Fuchs Group www.pepperl-fuchs.com
USA: +1 330 486 0001 fa-info@us.pepperl-fuchs.com
Germany: +49 621 776 4411 fa-info@de.pepperl-fuchs.com
Singapore: +65 6779 9091 fa-info@sg.pepperl-fuchs.com
PEPPERL+FUCHS SENSING YOUR NEEDS