Uniclass
L825+L853:P41

EPIC
Q25+Q53:X412

CI/SfB
923 (72)+(76) X

November 2000

Briton®

376E series of panic and emergency exit hardware



Architectural Hardware

The World's No.1

For more than a century, the name IR has been synonymous with the very best in design, manufacture and installation of architectural hardware.
A global leader in every sense of the term, IR has an unrivalled record in meeting and exceeding the demands of architects, designers, specifiers and builders throughout the world.

As one of IR's major operating divisions, IR Security and Safety Ltd is now the world's largest supplier of architectural hardware products and access and security systems. Through our trading division IR Architectural Hardware, we offer the widest possible choice of hardware products and systems to satisfy every conceivable need wherever commercial, private or public service buildings are created or refurbished.













Total quality assurance

All our products and systems are based on cutting edge technology, supported by major investment in research and development and by modern manufacturing techniques. Our world-class reputation for reliability and durability is founded on a commitment to continuous improvement in everything we do.
We work constantly to enhance the performance levels and aesthetic qualities of everything we produce, from a simple lever to a sophisticated automatic door system.

By giving uncompromising attention to detail at every stage of design, manufacture, assembly and inspection, we ensure that all our products and systems meet the highest possible quality and conformity standards, and exceed the requirements of all applicable European Standards.

Total service excellence

Our expert and fully trained service teams are dedicated to meeting and surpassing customers' requirements at all times, providing prompt, nationwide assistance and reliable support in any aspect of service you may require.

Our Technical Consultants will assist you with:

Product selection
Product specification
Provision of reference sites
Full quotation service
Project aftercare
Ongoing maintenance and lifetime service

To contact your Technical Consultant, call 08706 012012

Our Technical Services Department will assist you with :

Product selection
Advice on Installation
Trouble shooting
Advice and information from our extensive database of test data and certification

Call the Technical Service Department on FREEPHONE 0800 834 102

Site visits

A site visit service is available during construction programmes to offer advice on any aspect of fixing or application of our products. For building refurbishment or fire upgrading schemes this service is also available to finalise requirements in advance of preparing door hardware schedules.

We also provide a FREE, time-saving scheduling service.

Our computer aided architectural hardware scheduling programme will generate a full ironmongery schedule to your specification for any project level or size.

Further Information

Further details of all our product ranges and services can also be found by accessing our website at
www.architectural_hardware@irco.com





Why do you need Panic Exit Hardware?

Imagine…

…you're sitting in a theatre watching a sell-out play, captivated by the performance oblivious to your surroundings.

Suddenly!

…the stage is on fire and the flames roar towards you. Screams echo all around, as confusion and panic set in.

Holding onto your loved ones you clamber over the seats to escape the intense heat. You run towards the doors fighting for a way out. You reach the door and frantically try to open it, but no matter how hard you try the door will not open. Overcome by smoke you collapse to the floor, breathing becomes impossible… you pass out.

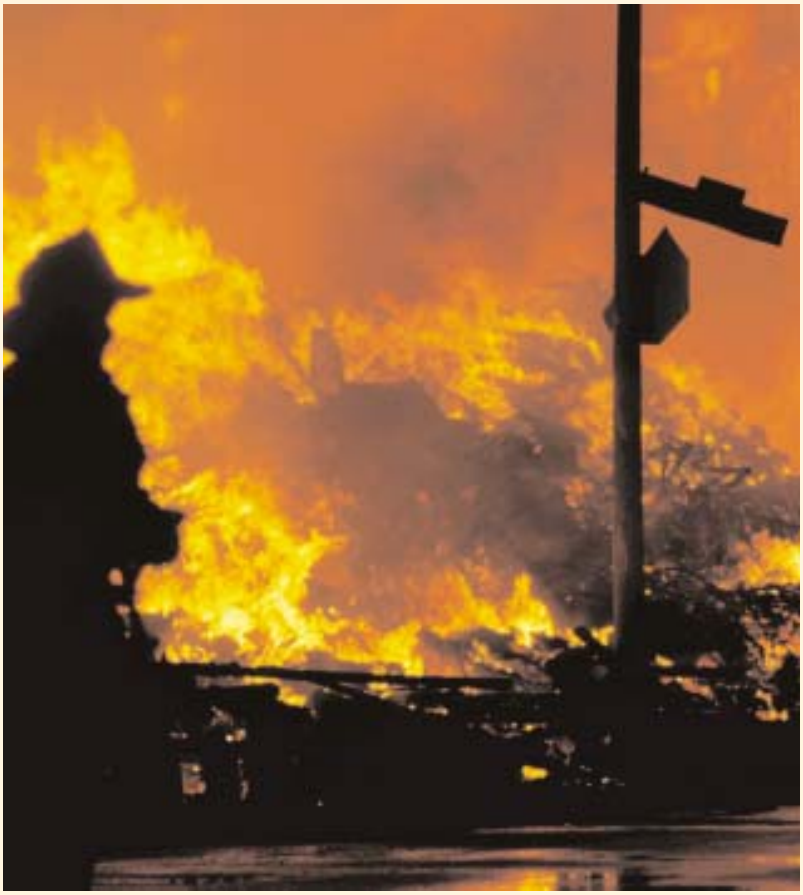

Fighting for your life…

An experience that far too many people have endured due to ignorance. Even though the panic exit device was invented nearly 100 years ago and generally has been developed into what can only be described as a 'life saver' people are still fighting for and losing their lives in tragedies worldwide due to:

- devices disabled with chains or wedges
- incorrectly installed devices
- poorly maintained products
- doors fitted with products not fit for the purpose

Too many people have lost their lives because they didn't have a choice...

You do.

Exit devices save lives

When disaster strikes we only hear about the negative aspect such as the injuries sustained and the lives lost. Very rarely do we hear the positive side, such as the number of people who escaped and survived simply because the right product was fitted and more importantly that it worked when it really needed to.

Briton panic exit hardware setting the standard

If the panic exit hardware is branded Briton you can be guaranteed that the product has been tested to exceed the requirements of BS EN 1125.

Continual investment into performance testing beyond the requirements of any standard ensure that all Briton panic exit hardware products are of the highest calibre.

Quality control manufacturing

The Briton 376E series undergoes something much more demanding than the traditional quality control procedure.

Quality is built in at every stage of manufacture by the people behind the product. From design to machine operation, assembly and through to inspection every individual takes responsibility for their part in the manufacture of the product and contributes to a continuous quality control ethic.

Briton exit devices are manufactured at IR Architectural Hardware who are accredited under BS EN ISO 9001 1994, which covers all aspects of their business from design through manufacture, to final inspection and ongoing customer service.

Understanding BS EN 1125 & BS EN 179

These standards will effectively become MANDATORY.

Every new build or replacement panic and emergency exit application is required to comply with European safety legislation. The European standards BS EN 1125 and BS EN 179 covering exit devices for buildings have now been designated to demonstrate compliance with this legislation. Together they replace BS 5725:pt1:1981 which is now withdrawn.

Two standards instead of one - which one for which application?

Panic Application - BS EN 1125

A panic application is where the exit door is used by the public and provides "safe and effective escape through the door way with minimum effort and without prior knowledge of operation".

For example:

- Theatres
- Shops
- Schools
- Hospitals
- Cinemas



Emergency Application - BS EN 179

An emergency application is where the exit door is used by trained personnel, not the general public in a low occupancy environment.

For example: a place of work, never accessed by the public or people unfamiliar with the escape drill.

- Offices
- Private Flats and Apartments
- Store Rooms / Boiler Rooms



Testing, testing...

When lives may depend on an exit device Briton feel they have a responsibility to design and test products to exceed all current performance and safety standards, ensuring people can always 'escape with Briton'.

Rigorous testing is continually being carried out on the Briton range of exit hardware providing peace of mind for specifiers, distributors, installers and users.

Abusing the bolt

Testing the strength of the bolt involves the equivalent of the combined strength of 4 people trying to pull the bolt away from the door.

An attempted break-in is simulated to test the security of the bolt, force is applied to the anti-thrust device as if the bolt were being 'jemmied' out of its socket.

Abusing the crossbar

The crossbar is attacked with a force equivalent to that of a 16 stone man (1000 Newtons) pulling and pushing it in all directions and standing on it, after which the bar must still operate.



Low operating force

Repeatedly tested to operate at 50% lower than the standard requirement, ensuring that the door can be operated with minimum force, for example by small children, the elderly and people with special needs.

Two tests are undertaken. The first is to operate the door with a maximum force of 80 Newtons.

The second test simulates a panic situation whereby the door is put under pressure by applying the force of a 16 stone man as if he was pushing against the door.
The operating force on the device with this weight should not exceed 220 Newtons.

The finger trap test

To reduce the risk of trapping fingers and/or the blocking of the panic device, any gap shall not trap a test rod of 10mm diameter at any position of the bar travel during the operation of the panic device.

Corrosion resistance

A test which measures how suitable the exit device is for varying environmental conditions. All Briton 376E series panic and emergency exit hardware have been tested to BS EN 1670 Building Corrosion Requirements and achieve at least grade 3 (High resistance) - suitable for wet, polluted environments and exposure to exterior conditions.

The standard BS EN 179 also features a number of tests used in BS EN 1125 but it has a variation on the test for security.

Cycle testing

Cycle tested to measure durability for everyday use. Briton 376E series products not only exceed the highest requirement of 200,000 cycles, they have been tested up to 600,000 cycles - 3 times the standard requirement!

Under both standards each product is classified and graded to identify the level of compliance within each category. These classifications are set out opposite.

Durability Cycle Tests

6 = 100,000

7 = 200,000

Fire Resistance

0 = not suitable for use on fire/smoke doors

1 = suitable for use on fire/smoke doors,

subject to assessment.

EN1670

Corrosion Resistance

3 = high

4 = very high

Type of Operation BS EN 1125:

A = panic devices with 'push bar' operation

B = panic devices with 'touch bar' operation.

BS EN 179:

A = exit devices with 'lever handle' operation

B = exit devices with 'push pad' operation.

3	7	6	1	1	3	2	2	A

Category of use

3 = High frequency of use by public and others with little incentive exercise care eg. schools, hospitals etc.

Door Mass

5 = doors up to 100kg

6 = doors up to 200kg

Safety

1 = Satisfies European safety requirements for ability to release locked doors on escape routes

Security BS EN 1125:

2 = 1000N

Security BS EN 179:

2 = 1000N

3 = 2000N

4 = 3000N

Projection of Bar

1= projection up to 150mm

2 = projection up to 100mm

There are 3 ways to be sure exit hardware meets the criteria laid down by BS EN 1125 and BS EN 179:

1.
Test certificates are readily available for inspection and as part of ongoing audit tests they are always less than 12 months old.

2.
Products are regularly tested within a UKAS accredited testing facility, such as APT Laboratories Ltd.

3.
Products are manufactured within an organisation which is accredited under BS EN 9001 which covers all aspects of their business from design through manufacture to final inspection and ongoing customer service.

Briton Exit devices not only comply with all 3 of the above, but they undergo regular production testing to ensure every Briton product is tested for YOUR life.





Double panic bolts are not permitted under the CEN Standards.

On double devices the crossbars project beyond the end boxes often snagging the firefighters' clothing or equipment as they enter the burning building to extinguish the fire and save lives.

These projections can waste valuable seconds, which could be the difference between life and death...

See pages 16 and 17 for the safer alternative.

Products to BS EN 1125

"The most important thing you must consider when specifying panic exit hardware is who might be in the building in the event of an emergency."

Where personnel have not been trained in the location and operation of the buildings exit devices or members of the public have access, exit devices conforming to BS EN 1125 must be specified and installed.

IMPORTANT

If you are in any doubt at all ALWAYS use products that conform to BS EN 1125

The following range consists of a vertical panic bolt, rim panic latch and a mortice nightlatch operator. Each product is operated by a horizontal push bar, which when pushed in a downward arc withdraws either the bolts or the latch, releasing the door for immediate escape in the event of an emergency.



Briton 376E vertical panic bolt

- Two point locking for extra security
- Anti-thrust device, prevents unauthorised retraction of the latch bolt
- Suitable for use on single and double door applications
- Self-handed - will suit both left and right handed doors
- Suitable for doors up to 2500mm high x 1300mm wide
- Optional models available include pullman latches, alarmed and manually dogged functions
- Adjustable top and bottom shoots
- Supplied with an easy clean socket



Briton 378E reversible rim panic latch

- Suitable for use on single doors and the first opening leaf of double doors with rebated meeting stiles
- Supplied in left or right hand, but can be reversed on site
- Suitable for doors up to 1300mm wide
- Double door strike available for double rebated door applications
- Available with manual dogging
- Can be used with rim cylinder fitted to the outside of the door



Briton 379E-N mortice panic nightlatch

- Suitable for use on single and the first opening leaf of double door applications
- Supplied right hand, but can be reversed on site
- Suitable for doors up to 1300mm wide
- Supplied with dual profile cylinder mortice nightlatch, accepts both euro and oval profile cylinders (cylinder not supplied)
- Anti-thrust device, prevents unauthorised retraction of the latch bolt
- Optional models include alarmed and manually dogged functions
- 13mm & 25mm rebate kits are available for double rebated door applications



Briton 377E double rebated door panic set

Comprises of Briton 376E vertical panic bolt, 378E reversible rim panic latch & 378DDS double door strike in one convenient pack.

Products to BS EN 179

"These products should NEVER be used in areas open to the general public."

Products tested (conforming to BS EN 179) are only intended for the use of personnel who are fully aware of the escape routes and have been trained to operate these devices.

The following range consists of a push pad vertical bolt, reversible push pad rim latch and push pad mortice nightlatch. Each product when operated withdraws either the bolts or the latch, releasing the door for immediate escape in the event of an emergency.



Briton 372E push pad vertical bolt

- Pad operated vertical bolt
- Anti-thrust device, prevents unauthorised retraction of the latch bolt
- Suitable for use on single and double door applications
- Self-handed to suit left and right handed doors
- Security - Grade 4: 3,000 Newtons
- Suitable for doors up to 2500mm high x 1300mm wide
- Adjustable top and bottom shoots
- Supplied with an easy clean socket



Briton 1438E reversible push pad rim latch

- Pad operated rim latch
- Suitable for use on single doors and the first opening leaf of double rebated door applications
- Supplied in left or right hand, but can be reversed on site
- Suitable for doors up to 1300mm wide
- Security - Grade 3: 2,000 Newtons
- Double door strike available for double rebated door applications
- Can be used with a rim cylinder fitted to the outside of the door



Briton 389E-N push pad mortice nightlatch

- Pad operated mortice nightlatch
- Suitable for use on single and the first opening leaf of double door applications
- Supplied right hand, but can be reversed on site
- Security - Grade 4: 3,000 Newtons
- Suitable for doors up to 1300mm
- Supplied with dual profile cylinder mortice nightlatch, accepts both euro and oval profile cylinders (cylinder not supplied)
- Anti-thrust device, prevents unauthorised retraction of the latch bolt
- 13mm & 25mm rebate kits are available for double rebated door applications

Briton®

Access and Escape

"Consideration should also be made to the following factors when selecting exit hardware."

Security

Although these devices are designed to provide immediate escape in an emergency situation, we have not forgotten the need for security against unauthorised use by shoplifters or from the outside by burglars.

The Briton 379E-N mortice panic nightlatch offers additional security without affecting safety.

Alarmed units Briton 376E-A and Briton 379E-NA have a switch mechanism in the end box providing an alarm function. The switch mechanism can be connected to an audio/visual alarm system giving immediate warning of any unauthorised use of emergency exits. The door cannot be opened without the alarm being activated. The unit has an electrical rating of 24 Volts D.C. - 1.4 Amps Maximum @ 70˚C

The Briton 539 Add Alarm (illustrated right) provides the ability to add an alarm function to an existing vertical panic bolt installation.



Briton 539 add-alarm

Vertical bolt add alarm is a self contained, battery operated local alarm.

When fitted to a vertical bolt an audible alarm (of up to 85dba at 1m) is sounded if the crossbar is depressed, or if there is an attempt to remove the alarm cover. Once the alarm is initiated only the keyholder can switch it off. The lock is a radial pin tumbler cylinder for additional security with 10,000 key combinations.

The unit is surface fixed with tamper proof fixing and readily adaptable for use on existing vertical panic bolts with a shoot bolt diameter of up to 19mm and a maximum back centre dimension of 14mm from the door face.

The battery is long life high power (PP3 9v) and a testing procedure is provided with an automatic low battery indication giving an audible warning every 30 seconds.

Add alarms are handed, please state hand when ordering. Supplied in red.



Smooth and quiet action

For doors that are subject to high levels of traffic, for example interconnecting doors in highly populated areas pullman latches on a vertical panic bolt provide a smooth and quiet alternative.

Available on Briton 376E-P and 376E-PD.



Controlled Access

Using a Briton 1413E outside locking device will give access from the outside for keyholders when the door is locked. When unlocked the door can also be operated from the outside by using the lever/knob.
See page 12 for further details.

To permit free access during designated periods, the option of manual dogging can be selected, which allows the latch or the bolts to be held in the withdrawn position.
Available on Briton 376E-D, 376E-PD, 378E-D & 379E-ND. Manual dogging is not permitted for fire door applications.

A choice of finish

All exit devices and outside access devices are now available in a wide range of finishes including:

Powder coated finishes
silver (SE), gold (GE) and the full range of colours to match the Normbau range of nylon architectural hardware.

Dual finishes
green and white, black and red

All coloured finishes are now powder coated for increased durability and have been salt-spray tested in excess of 240 hours.

Metallic finishes
satin stainless steel (SS),
polished stainless steel (PS), polished brass (PB)

Double door strikes and metal door strikes are now available colour matched.





Metallic

Polished Stainless Steel **(PS)**

Satin Stainless Steel **(SS)**

Polished Brass **(PB)**

Powder Coated

Silver **(SE)**

Gold **(GE)**

White 19 **(NWH)**

Manhattan 67 **(NMG)**

Dark Grey 18 **(NDG)**

Ivory 65 **(NIV)**

Sandstone 61 **(NST)**

Brown 74 **(NBR)**

Violet 73 **(NVT)**

Red 12 **(NRE)**

Dark Red 35 **(NDR)**

Slate Blue 63 **(NSB)**

Blue 11 **(NBU)**

Dark Blue 37 **(NDB)**

Light Green 76 **(NLN)**

Green 13 **(NGR)**

Dark Green 36 **(NDN)**

Yellow 22 **(NYE)**

Black 16 **(NBL)**

Due to the limitation of the printing process, we suggest you check your final choice of finish against the actual products or sample swatch.

Outside Access Devices

- Designed to suite with all devices within the Briton 376E series of CEN compliant exit devices.
- Choice of interchangeable knob, or lever (available separately) allowing the most appropriate method of operation to be selected for the buildings users.
- Supplied with euro-profile cylinder as standard. Cylinders can be keyed-alike or master-keyed.
- Clearly illustrated instructions and template enabling accurate installation
- Suitable for doors between 40mm and 70mm thick
- Fixings supplied are suitable for timber & metal doorsets
- Tested to 200,000 cycles
- Powder coated for additional durability – choice of silver, gold or 17 Normbau finishes.
- Choice of plated finishes – satin stainless steel, polished stainless steel and polished brass.
- 5 year warranty.



Briton 1413E/LE - lever variant

- A combination of market trends and the effect of The Disability Discrimination Act (DDA) has resulted in an increase in market demand for lever operation.
- The lever is secured to the OAD by a special shear screw designed to break if the lever is severely abused (e.g. attempted break in, or vandalism) ensuring the mechanism is protected from damage. The shear pin can then be simply replaced to restore normal operation.
- Lever supplied loose to allow easy on-site handing



Briton 1413E/KE – knob variant

- Ergonomic design providing improved grip in wet conditions.
- Non-handed



Legge rim cylinder - B6

- For use with Briton 378E and 1438E
- Available in polished brass and satin nickel finishes

Accessories



Extra long top shoot - 376ELTS

- Extra long top shoots are suitable for use on doors in areas that require the push bar to be in a lower position ie schools. It can also be used on doors up to 3350mm, however doors over 2500mm are outside the scope of BS EN 1125 and BS EN 179.
- For use with Briton 376E, 376E-D, 376E-P, 376E-PD 376E-A, and 372E.
- Available in a wide range of finishes. *(see page 11)*



Flush face keeper plate - 376FFKP

- For use with 376E, 376E-D, 376E-A, and 372E
- For applications where there is a flush head frame for the bolt to be secured the flush face keeper plate can be used.



Double door strike - 378DDS

- For use on double rebated door applications with a rim panic latch on the first opening leaf and a vertical bolt on the second opening leaf.
- Available in a wide range of finishes. *(see page 11)*

Door co-ordinator

BS EN 1125 and BS EN 179 recommend that on a pair of self-closing double rebated fire doors a door co-ordinating device is fitted to ensure the door leaves close in the correct sequence.

Available from the IR range of architectural hardware is the 3000 series door selector which has been included in a successful fire test to BS 476 part 22 1987. For use on 13mm-25mm rebates. Available in sprayed silver, polished brass and satin chrome plated.

Metal Door Applications

The following surface fixed strikes have been specifically designed for use on metal door sets to simplify installation.





- Briton 376MDS (illustrated above) for vertical panic bolts comprises of 2 strike plates and 1 trip plate to activate the top tripper



- Briton 378MDS metal door strike (illustrated above) for use with Briton 378E rim devices on single doors, or on the first opening leaf of a double rebated application.

All Briton exit devices are supplied with self-tapping screws as standard, which are suitable for both timber and metal doorsets.

For customers who prefer machine screws, alternative fixing packs are now available.

Applications



Applications

Product Type	376E	376E-D	376E-P	376E-PD	376E-A	378E	378E-D	377E	379E-N	379E-NA	379E-ND	372E	1438E	389E-N
Vertical panic bolt	●	●	●	●	●									
Rim panic latch						●	●							
Double rebated door panic set								●						
Mortice panic nightlatch									●	●	●			
Pad operated vertical bolt												●		
Pad operated rim latch													●	
Pad operated mortice nightlatch														●

Applications	376E	376E-D	376E-P	376E-PD	376E-A	378E	378E-D	377E	379E-N	379E-NA	379E-ND	372E	1438E	389E-N
Panic Application BS EN 1125														
For use on double doors plain meeting stiles														
1st leaf	●	●	●	●	●				●	●	●			
2nd leaf	●	●	●	●	●									
For use on double doors rebated meeting stiles														
1st opening leaf						●	●	●	●	●	●			
2nd opening leaf	●	●	●	●	●			●						
Emergency Application BS EN 179														
For use on double doors plain meeting stiles														
1st leaf												●		
2nd leaf												●		
For use on double doors rebated meeting stiles														
1st opening leaf													●	●
2nd opening leaf												●		
Fire Resistance														
For use on fire doors	●		●		●	●		●	●	●		●	●	●
Must not be used on fire doors		●		●			●				●			

Features	376E	376E-D	376E-P	376E-PD	376E-A	378E	378E-D	377E	379E-N	379E-NA	379E-ND	372E	1438E	389E-N
Surface mounted	●	●	●	●	●	●	●	●	●	●	●	●	●	●
Adjustable shoots for variable fixing	●	●	●	●	●			●				●		
Cross bar or shoots supplied with loose end plugs enabling these to be cut to size on site	●	●	●	●	●	●	●	●	●	●	●	●		
Self handed	●	●	●	●	●							●		
Easy on site handing						●	●	●	●	●	●		●	●
Handed - specify when ordering						●	●	●					●	
Alarmed - requires electric current					●					●				
Dogged for convenience		●		●			●				●			
C/W dual profile cylinder mortice nightlatch									●	●	●			●
Pullman latches top and bottom			●	●										



Key:

A Alarmed

D Manual dogging

P Pullman latches

PD Pullman latches and manual dogging

Accessories	376E	376E-D	376E-P	376E-PD	376E-A	378E	378E-D	377E	379E-N	379E-NA	379E-ND	372E	1438E	389E-N
539 Add alarm	●	●	●	●	●							●		
1413E Outside access device	●	●	●	●	●	●	●	●	●	●	●	●	●	●
376ELTS Extra long top shoot	●	●	●	●	●			●				●		
3000 Door selector (for use on double door applications with rebated meeting stiles)	●	●	●	●	●	●	●	●	●	●	●	●	●	●
Legge B6 Rim cylinder						●	●						●	
376FFKP Flush face keeper plate	●	●			●							●		
378DDS Double door strike (for use on timber double door applications only)						●	●	●					●	
376MDS Metal door strike	●	●	●	●	●			●				●		
378MDS Metal door strike						●	●	●					●	
379DDRK-13 Rebate kit									●	●	●			
379DDRK-25 Rebate kit									●	●	●			

Finishes	376E	376E-D	376E-P	376E-PD	376E-A	378E	378E-D	377E	379E-N	379E-NA	379E-ND	372E	1438E	389E-N
Sprayed silver	●	●	●	●	●	●	●	●	●	●	●	●	●	●
Sprayed gold	●	●	●	●	●	●	●	●	●	●	●	●	●	●
Normbau colours	●	●	●	●	●	●	●	●	●	●	●	●	●	●
Dual finish	●	●	●	●	●	●	●	●	●	●	●			
Plated finishes	●	●	●	●	●	●	●	●	●	●	●	●	●	●

Standards	376E	376E-D	376E-P	376E-PD	376E-A	378E	378E-D	377E	379E-N	379E-NA	379E-ND	372E	1438E	389E-N
Fully compliant to BS EN 1125	●	●	●	●	●	●	●	●	●	●	●			
Fully compliant to BS EN 179												●	●	●
Fire tested - BS 476 Part 22 (TIMBER DOORS - 60 mins)	●		● †		●*	●		●	●*	●*	●*	●	●	●*
Fire tested - BS 476 Part 22 (STEEL DOORS - 240 mins)	●		● †		●*	●		●	●*	●*	●*	●	●	●*

† Device should only be fitted to fire doors that have been tested in the unlatched position

* Graphite based intumescent material will be required for these products to maintain the integrity of the door once that product is installed

Guarantee	376E	376E-D	376E-P	376E-PD	376E-A	378E	378E-D	377E	379E-N	379E-NA	379E-ND	372E	1438E	389E-N
5 year guarantee	●	●	●	●	●	●	●	●	●	●	●	●	●	●

Classifications	376E	376E-D	376E-P	376E-PD	376E-A	378E	378E-D	377E	379E-N	379E-NA	379E-ND	372E	1438E	389E-N
BS EN Standard classification numbers														
37611322A	●		●		●	●		●	●	●				
37601322A		●		●			●				●			
37611332B													●	
37611342B												●		●

Application Guide

Briton 376E series Panic and Emergency exit hardware is suitable for application to single doors, and in combinations on non-rebated and rebated double doors.

Consideration should be given to the use of door co-ordinating devices for rebated pairs of doors.
A door co-ordinating device must be used for fire/smoke applications.

BS EN 1125

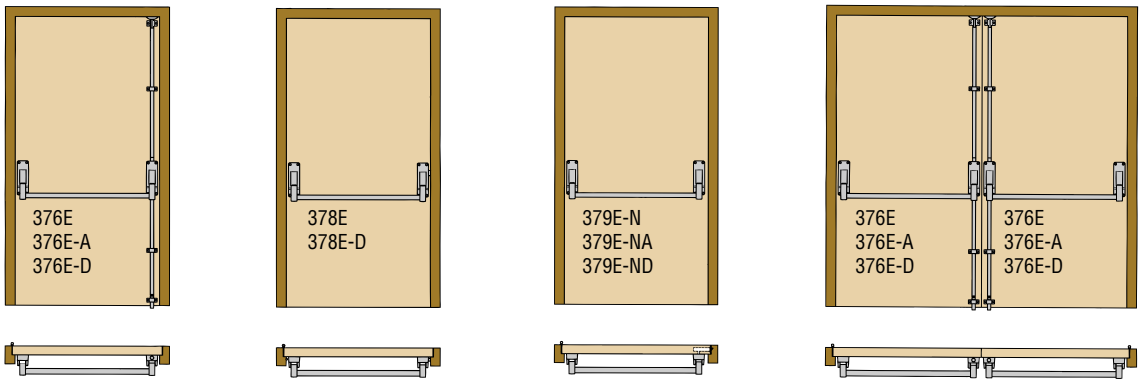

Vertical bolts with top and bottom shoot bolts

Plain meeting stiles



Vertical bolts with top and bottom pullman latches

Plain meeting stiles

BS EN 179

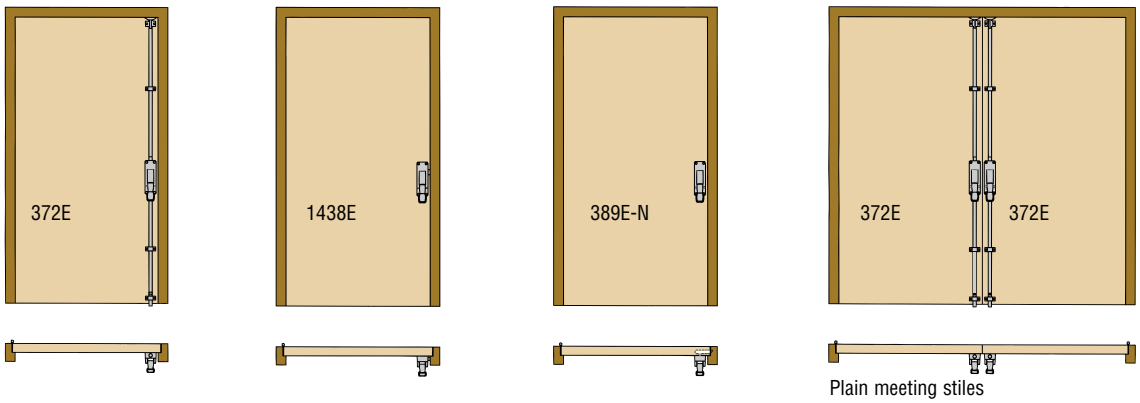

Plain meeting stiles

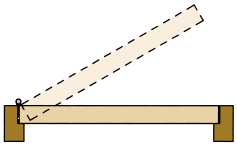

Clockwise closing
Left hand
ISO. 5.0

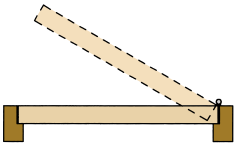

Anti-clockwise closing
Right hand
ISO. 6.0

BS EN 1125

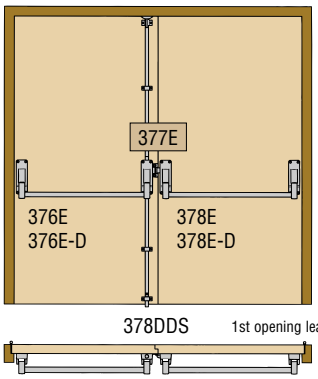

Rebated meeting stiles
Vertical bolts with top and bottom shoot bolts

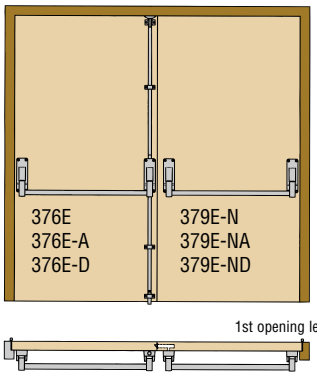

Plain meeting stiles

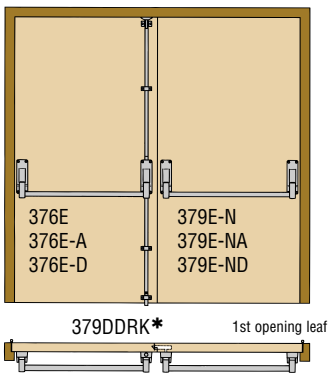

Rebated meeting stiles

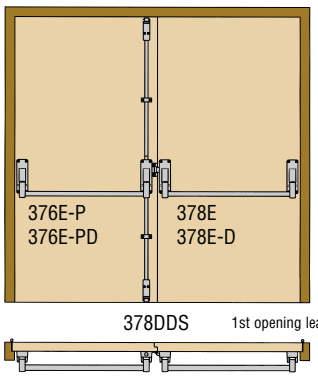

Rebated meeting stiles
Vertical bolts with top and bottom pullman latches

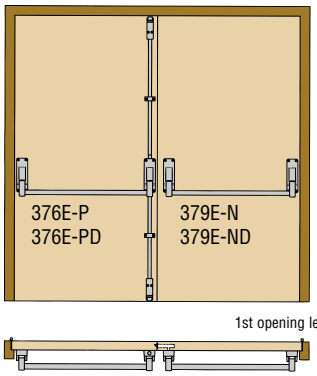

Plain meeting stiles

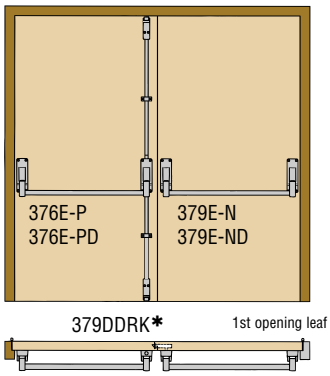

Rebated meeting stiles

BS EN 179

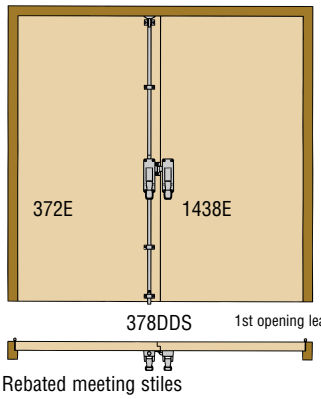

Rebated meeting stiles

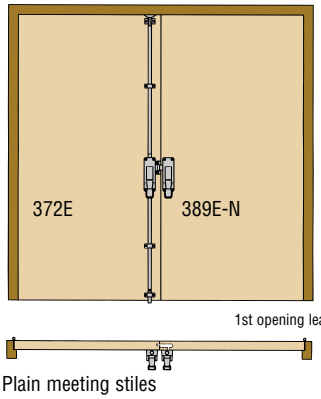

Plain meeting stiles

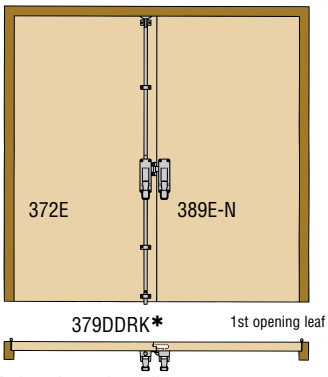

Rebated meeting stiles

*Rebate kits are available to suit 13mm & 25mm rebates (379DDRK-13 & 379DDRK-25)

Technical Data

Construction

Aluminium die cast body and end boxes, with extruded aluminium guides. Solid steel shoot ends with tubular steel shoots and cross bars. Latch bolts are manufactured from extruded brass.

Maintenance

Panic and emergency exit hardware play a vital role in the buildings escape route, and it is important that these devices are inspected and maintained properly to ensure safety at all times.

As recommended in BS EN 1125 and BS EN 179 the following routine maintenance checks should be undertaken at intervals of not more than 1 month by the occupier or his approved representative:

- Inspect and operate the emergency exit device to ensure all components are in satisfactory working condition
- Ensure that keepers are free from obstruction

Spares Manual

Exit devices are 'life safety' products and it is imperative that they are regularly maintained to ensure that they will always operate correctly should the unthinkable ever happen! As part of IR's commitment to 'life safety' we have now introduced a comprehensive spares offering for the Briton 376E range of exit devices, allowing any damaged parts to be replaced.

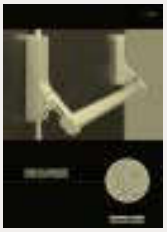

Fire/Smoke

Reference the Fire Precautions Act 1971, always consult the Local Fire Officer for his/her interpretation of the Act before finalising specification. Products within the Briton 376E series have been included in successful fire tests to BS 476 Part 22 1987. See page 15 for details of products tested.

Fixing/Installation

Surface mounted and easily installed as fully described in the fixing instructions. Bars and shoots are supplied with loose end plugs and should be cut to exact size on site. Top and bottom shoots allow 5mm adjustment to ensure accurate fixing. Fixing and maintenance instructions must always be passed on to the user upon completion of installation.

Guarantee

To back up the high quality performance guarantee and durability of the Briton 376E series, it is supplied with a 5 year guarantee on mechanical parts, with free replacement ex-works of any Panic and Emergency Exit hardware proved defective by reason of either faulty manufacture or defect in materials.

Special Applications

For special applications outside those mentioned within this brochure please contact technical support who will be able to advise and assist with product selection for non-standard installations.

Technical Support

If you have any queries regarding Briton exit devices and product selection please call our technical support department who will be pleased to offer any assistance on any aspect of our products including queries on:

- **Product selection**
- **Advice on installation**
- **Trouble shooting**
- **Ancillary products and spare parts.**

For futher details call the Technical Support team on FREEPHONE 0800 834102

Supply & Quotations

The Briton 376E series is available through a nationwide network of architectural ironmongers and builder's merchants. For your local stockist please contact the Customer Call Centre on 08706 012 012

Other products to BS EN 1125 include the Briton 550 series, a neat and unobtrusive range of panic exit touch bars.

Further details available on request.



Briton 550 series panic exit touch bars.

Dimensions

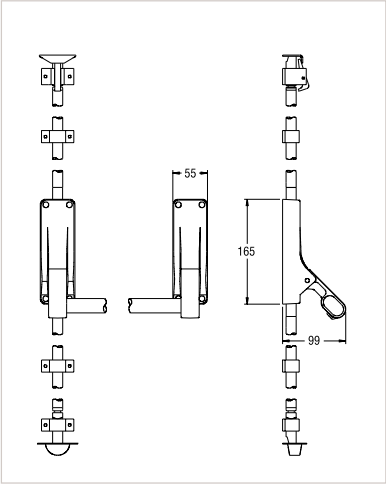

Briton
376E, 376E-D, 376E-P, 376E-PD, 376E-A

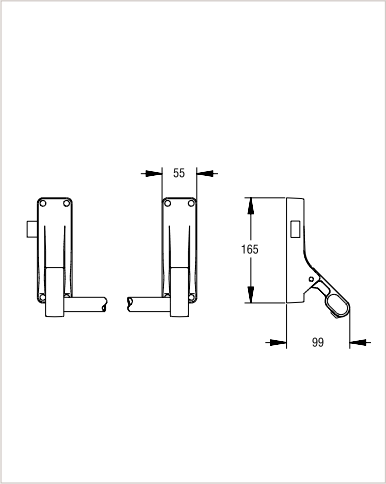

Briton
378E, 378E-D

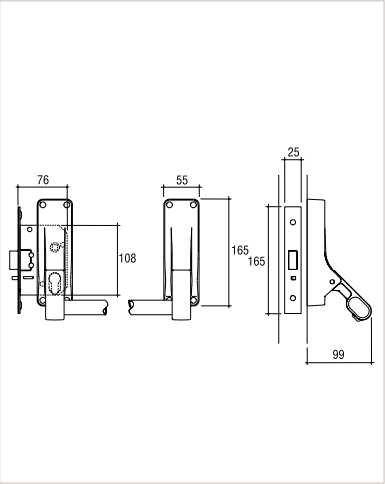

Briton
379E-N, 379E-NA, 379E-ND

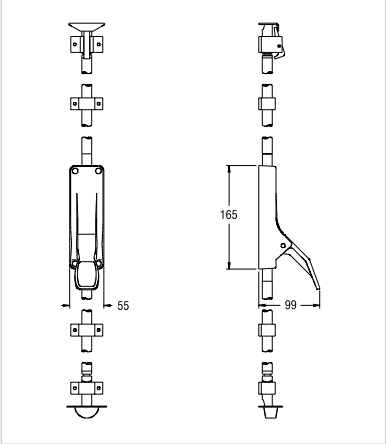

Briton
372E

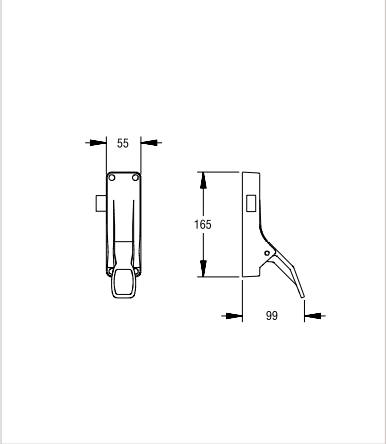

Briton
1438E

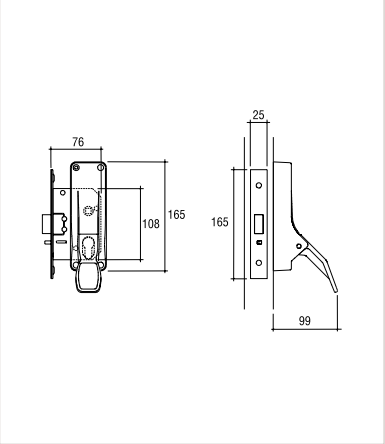

Briton
389E-N

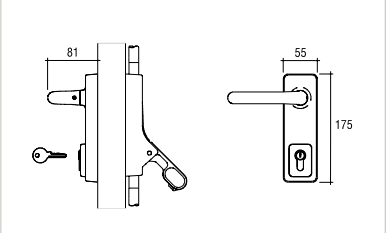

Briton
1413E/LE

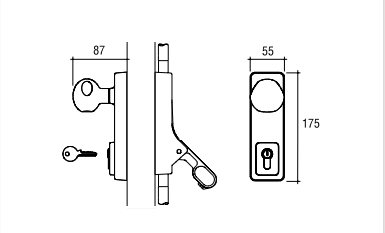

Briton
1413E/KE

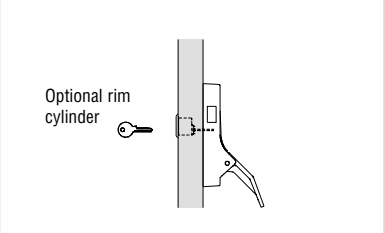

Legge
B6

Door sizes

For all products, suitable for use on doors up to 2500mm high x 1300mm wide. Minimum width of stiles 78mm for 13mm rebates and 90mm for 25mm rebates. For doors with less than 665mm clear opening width please seek advice from Technical Services. For Briton 379E-N, 379E-NA & 379E-ND minimum door thickness is 40mm and minimum width of stile is 88mm.

Architectural Hardware

IR Security & Safety Ltd

Architectural Hardware

Bescot Crescent
Walsall
West Midlands
WS1 4NF

01922 707400
01922 646303 General Fax
08706 012012 Customer Call Centre
0800 834103 Customer Call Centre Fax
0800 834102 Technical Support

Email architectural_hardware@irco.com
Web www.irarchitecturalhardware.co.uk

Whilst IR Architectural Hardware have taken every care to ensure the accuracy of information, data or advice contained in this literature, no liability in respect of such information or advice, whether given negligently or not can be accepted by the company.

IR Architectural Hardware retains the right to amend the technical specification of any range of equipment shown, without prior notice.

© IR 2000.

CD0219