XV4 Series
High Power Pre-Charge Resistors



- Pre-charge & discharge resistors
- Intrinsically safe
- Aluminium housed
- AEC-Q200 automotive grade*
- Power ratings from 80W to 500W
- Resistance ranges from 0.5Ω to 3KΩ
- Tolerances of 1%, 5% & 10%
- High voltage cable for electric & hybrid vehicles

RoHS Compliant ✓

Technical Data — Table 1

Type	XV4-A80 / XV4-B80	XV4-A100 / XV4-B100	XV4-A120 / XV4-B120	XV4-A150 / XV4-B150	XV4-A200 / XV4-B200	XV4-A300 / XV4-B300	XV4-A400 / XV4-B400	XV4-A500 / XV4-B500
Power rating (heatsink)▲	80W	100W	120W	150W	200W	300W	400W	500W
Power rating (in free air)	64W	80W	96W	120W	140W	210W	240W	300W
Maximum Voltage	1000V	1000V	1000V	1000V	1200V	1500V	1500V	1500V
Resistance tolerance	± 1%, ± 5%, ± 10%							

▲ Power rating dependent on a heatsink with enough mass to ensure resistor surface temperature does not exceed 250°C. See Fig. 1

Performance Data — Table 2

Design voltage	√(P x R)
TCR	0.5Ω to 1Ω: 1300ppm/°C | 1.1Ω to 5Ω: 500ppm/°C | 5.1Ω to 3KΩ: 260ppm/°C
Resistance range	Standard: 0.5Ω ~ 3KΩ / Non-inductive: 10Ω ~ 100Ω
Operating voltage	≥ 1000VDC
Maximum current	15A
Dielectric voltage	2500V
Insulation resistance	1MΩ
Operating temperature	-40 ~ 155°C ± 2% +0.05Ω
Load life	300,000 cycles ± 3% +0.05Ω
Short duration	200ms @ 15A ± 2% +0.05Ω
Mechanical vibration	100G, 6ms Half sine, 3 times/axis, Total 6 axis ± 1% +0.05Ω
Short time overload	10X for 5sec ± 2% +0.05Ω
Short circuit	Pulse Duration: 200ms. Cycle time: 2sec 1 time: 5 cycles. Total: 5 times ± 2% +0.05Ω
Terminations	200 ± 10mm. High voltage cable, Cu-R4XLPO-HV-3.0mm² (-40°C ~ +150°C / 3000hr)

Power derating curves — Fig. 1

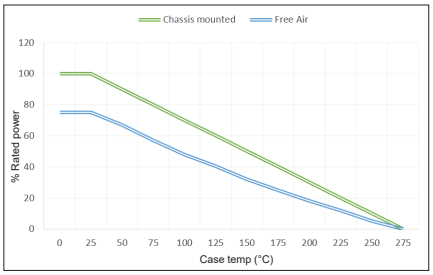

Suggested minimum chassis / heat sink

80 ~ 150W: 200 x 200 x 3mm

200 ~ 500W: 400 x 400 x 3mm

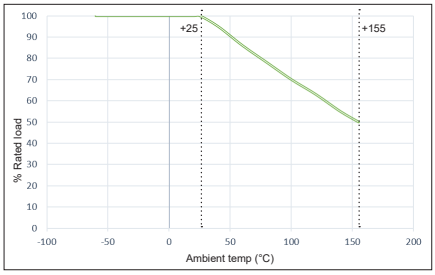

Specifications are subject to change without notice. E&OE.

Dimensions (mm) — Fig. 2

XV4A

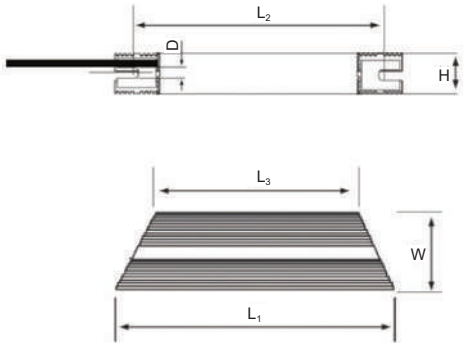

XV4B

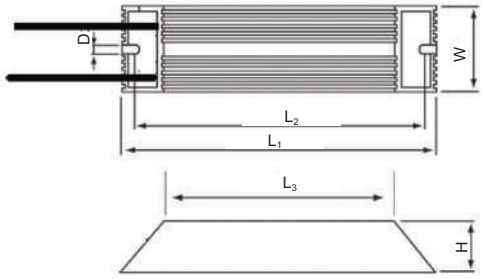

Dimensions (mm) — Table 3

Type	L_1 ±2	L_2 ±2	L_3 ±2	W ±0.5	H ±0.5	D ±0.5	Weight (g)
XV4-A80 / XV4-B80	150	137	110	41	22	4.3	206
XV4-A100 / XV4-B100	165	152	125	41	22	4.3	240
XV4-A120 / XV4-B120	182	169	142	41	22	4.3	270
XV4-A150 / XV4-B150	210	197	170	41	22	4.3	340
XV4-A200 / XV4-B200	165	146	125	60	30	5.3	450
XV4-A300 / XV4-B300	215	196	175	60	30	5.3	610
XV4-A400 / XV4-B400	265	246	225	66	30	5.3	790
XV4-A500 / XV4-B500	335	316	295	60	30	5.3	950

Example Ordering Code

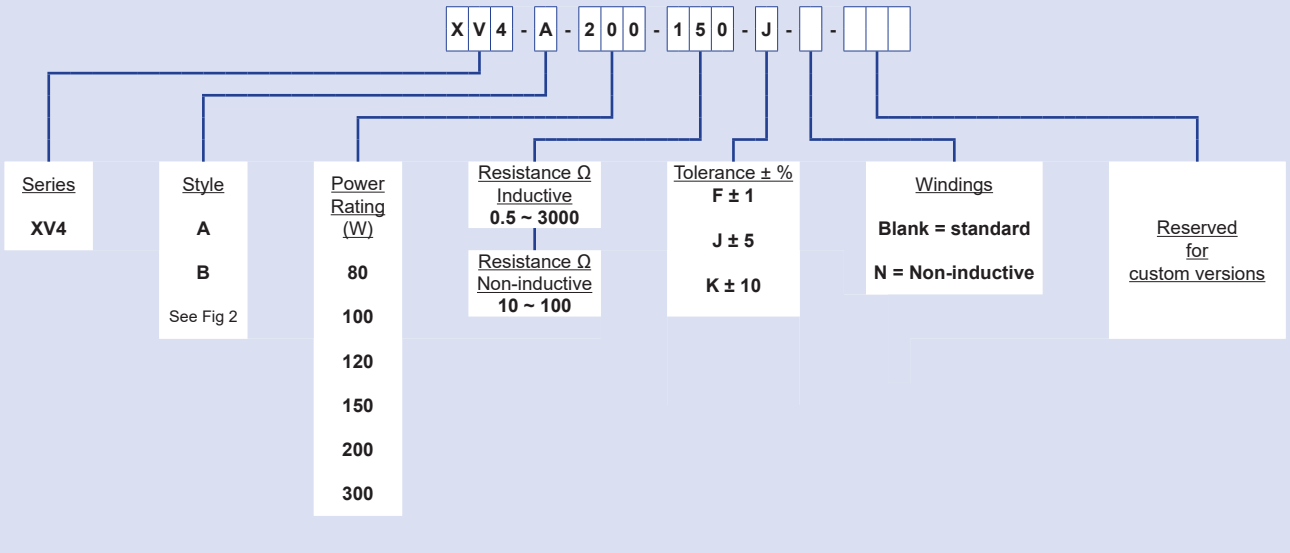

* AEC-Q200:
This product has undergone rigorous AEC-Q200 testing and is certified in the 100W, 100ohm, +/-5% variant. If you need more detailed information around AEC-Q200 testing for specific resistance values, please contact our team of engineers.

Specifications are subject to change without notice. E&OE.