Brand of NTN corporation

Technical data

USFLE206

Bearing units



Grey cast housing, radial insert ball bearing with socket set screws, single lip seal

KIT CONTENT

US.206.G2, FLE206

VISUAL (S)

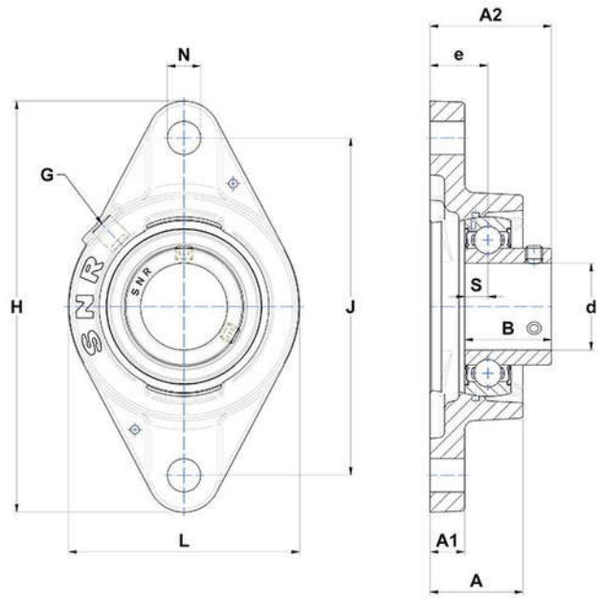

PRODUCT DEFINITION

Brand	SNR
A - Housing height	32,1 mm
A1 - Housing foot height / flange height	12 mm
A2 - Total height from mounting surface	42 mm
B - Width of Inner Ring	30 mm
d - Shaft diameter	30 mm

USFLE206
Bearing units

PRODUCT DEFINITION	
e - Distance mounting surface to bearing center	20 mm
G - Grease fitting	R1/8"
H - Housing length, width or diameter	142 mm
J - Mounting holes distance	116,5 mm
L - Housing width / diameter	80 mm
N - Mounting hole dimension	11,5 mm
S - Distance front side/bearing centre	8 mm

PRODUCT PERFORMANCE	
C - Dynamic load rating	19500000 mN
C0 - Static load rating	11200000 mN
Operating temperature min.	253,15 °K
Operating temperature max.	373,15 °K

OTHER FEATURES	
Mass	0,77 kg
Recommended tightening torque for set screw	5.5 N-m