OGE303

Through-beam sensor receiver

OGE-HPKG/6M

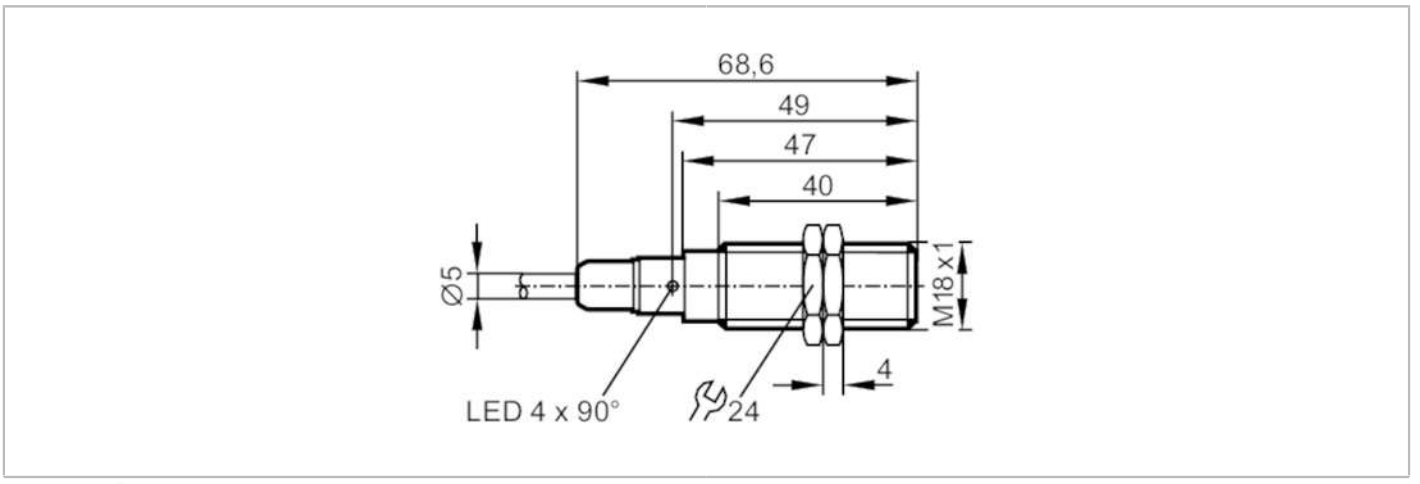

Product characteristics		
Type of light		red light
Housing		threaded type
Application		
Function principle		Through-beam sensor
Electrical data		
Operating voltage	[V]	10...36 DC
Current consumption	[mA]	10
Protection class		II
Reverse polarity protection		yes
Type of light		red light
Outputs		
Electrical design		PNP
Output function		light-on mode
Max. voltage drop switching output DC	[V]	2.5
Permanent current rating of switching output DC	[mA]	150; (200 (...60 °C))
Switching frequency DC	[Hz]	1000
Short-circuit protection		yes
Type of short-circuit protection		pulsed
Overload protection		yes
Detection zone		
Transmitter / receiver		receiver
Range	[m]	< 20
Range adjustable		no
Operating conditions		
Ambient temperature	[°C]	-25...80
Protection		IP 65; IP 67; IP 68; IP 69K

OGE303

Through-beam sensor receiver

OGE-HPKG/6M

Tests / approvals			
EMC		EN 60947-5-2	
MTTF	[years]	1067	
Mechanical data			
Weight	[g]	275.8	
Housing		threaded type	
Dimensions	[mm]	M18 x 1 / L = 68.6	
Thread designation		M18 x 1	
Materials		housing: stainless steel (316L/1.4404); Sealing: EPDM	
Lens material		PMMA	
Displays / operating elements			
Display		switching status	1 x LED, yellow
Accessories			
Items supplied		lock nuts: 2	
Remarks			
Remarks		operating voltage "supply class 2" according to cULus	
Pack quantity		1 pcs.	

Electrical connection

Cable: 6 m, PVC; 3 x 0.34 mm²

Connection

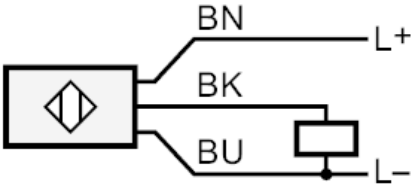

	Core colours :
BK =	black
BN =	brown
BU =	blue

OGE303

Through-beam sensor receiver

OGE-HPKG/6M

Diagrams and graphs

excess gain graph

