87045 LIMOGES Cedex
Telephone number: +33 (0)5 55 06 87 87 – Fax: +33 (0)5 55 06 88 88

DX³ MCB 4500 A / 6 kA
Phase + Neutral, neutral on left side

Cat. N°(s): 4 068 75, 4 068 76, 4 068 77, 4 068 78, 4 068 79, 4 068 81, 4 068 82, 4 068 83, 4 068 84, 4 068 85, 4 068 86, 4 068 87



CONTENTS PAGE

1. Description, use 1
2. Range 1
3. Overall dimensions 1
4. Preparation - Connection 1
5. General characteristics 3
6. Compliance and approvals 18
7. Curves 19
8. Auxiliaries and accessories 23

1. DESCRIPTION - USE

Thermal-magnetic circuit breaker (MCB) with positive contact indication for control, protection against short-circuits and overloads, and isolation of electrical circuits.

Symbol:

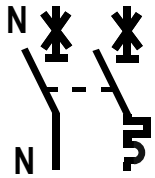

Technology:

. Limiting device
. The Neutral contact closes before and opens after the Phase contact
. The Phase pole provides protection and isolation for the Phase circuit
. The neutral pole provides isolation for the Neutral circuit

2. RANGE

Polarity:

. 2 poles including 1 protected pole and 1 neutral pole

Width:

. 1 module (17.8 mm)

Rated currents In:

.1 / 2 / 3 / 4 / 6 / 10 / 13 / 16 / 20 / 25 / 32 / 40 A

Magnetic tripping curves:

. C curve (between 5 and 10 In)

Rated voltage and frequency:

. 230 V ~, 50 Hz with standard tolerances
. 240 V ~, 50 Hz with standard tolerances

Breaking capacity:

. Icn = 4500 A in accordance with standard EN/IEC 60898-1
. Icu = 6 kA in accordance with standard EN/IEC 60947-2

3. OVERALL DIMENSIONS

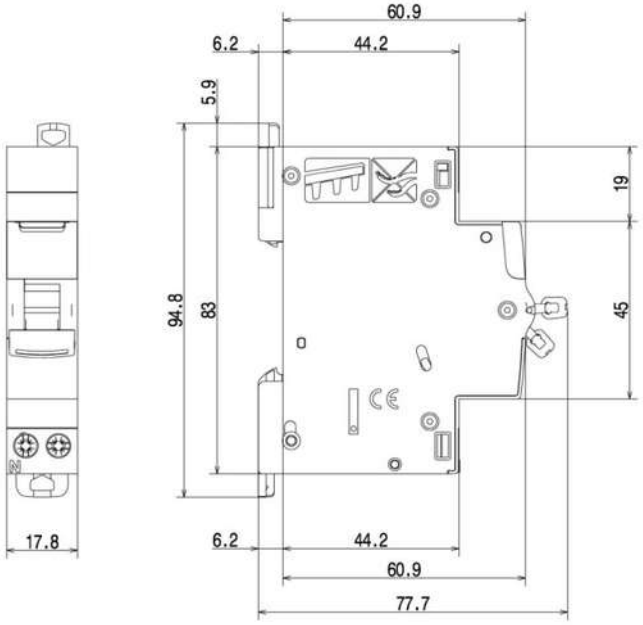

4. POSITIONING - CONNECTION

Mounting:

. On symmetrical EN 60.715 rail or DIN 35 rail

Operating position:

.Vertical Horizontal Upside down On the side

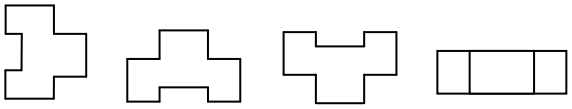

Power supply:

. Either from the top or the bottom

4. POSITIONING - CONNECTION *(continued)*

Connection:

. Terminals protected against direct contact IP20, wired device

At the top

. Terminals for supply busbars

. Alignment and spacing of the terminals permitting connection with the other products in the range via prong supply busbars

At the bottom

. Cage terminals, with release and captive screws

. Terminals fitted with shutters preventing a cable being placed under the terminal, with the terminal partly open or closed

. Alignment and spacing of the terminals permitting connection with the other products in the range via prong supply busbars

. Terminal depth: 13 mm

. Screw head: mixed, slotted and Pozidriv no. 2

. Tightening torques:

- Recommended: 1.6 to 2 Nm
- Min.: 1,2 Nm
- Max.: 2,8 Nm

Conductor type:

At the top

. Prong busbar

At the bottom

. Copper cable or Prong busbar

. Cable cross-section

	Without ferrule	With ferrule
Rigid cable	**1 x 0.75 to 16 mm² 2 x 0.75 to 6 mm²**	-
Flexible cable	**1 x 0.75 to 10 mm² 2 x 0.75 to 4 mm²**	**1 x 0.75 to 10 mm²**

Recommended tools:

. For the terminals at the bottom, screwdriver with 5.5 mm blade or Pozidriv no. 2 screwdriver

. For attaching or removing the DIN rail, screwdriver with 5,5 mm blade or Pozidriv no. 2 screwdriver

Manual actuation of the MCB:

. Ergonomic 2-position handle

. "O-OFF": Device open

. "I-ON": Device closed

Contact status display:

. By marking of the handle

- "O-OFF" in white on a green background = contacts open
- "I-ON" in white on a red background = contacts closed

Locking:

. Padlocks possible in the open and closed positions with padlock support (Cat. No. 4 063 03) and Ø5 mm padlock (Cat. No. 4 063 13) or Ø6 mm padlock (Cat. No. 0 227 97)

4. POSITIONING - CONNECTION *(continued)*

Sealing:

. Possible in the open or closed positions

Labelling:

. Circuit identification by way of a label inserted in the label holder situated on the front of the product.

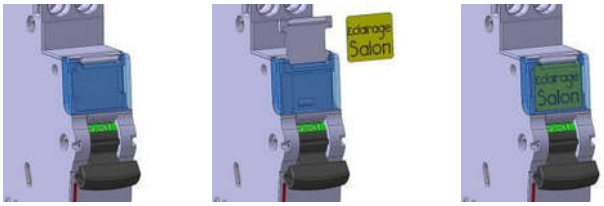

5. GENERAL CHARACTERISTICS

Neutral earthing system:
. IT, TT, TN

Marking on the front side:
. By permanent ink pad printing

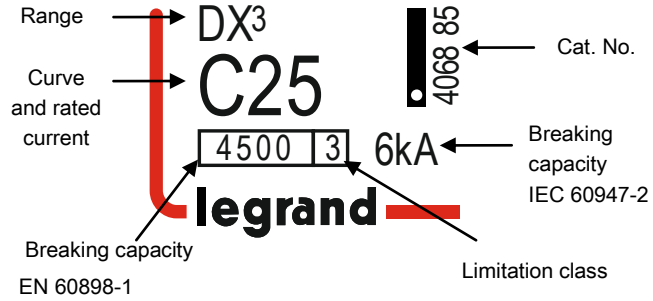

Marking on the upper panel:
. By permanent ink pad printing

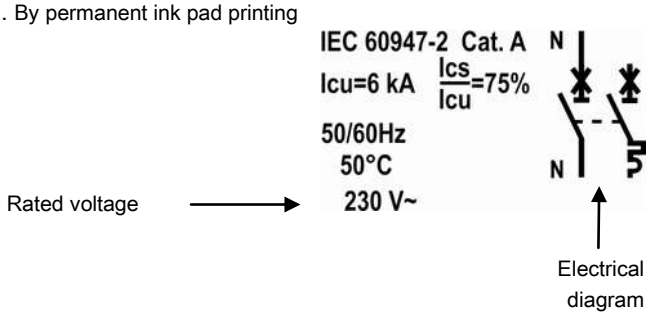

. The terminals upstream and downstream of the neutral pole are marked with an "N" moulded close to the screw heads.

Minimum operating voltage:
. U = 12 V AC / DC

Maximum operating voltage:
. U = 250 V / 50Hz

Breaking capacity on one single pole (phase pole):
. In accordance with I_{IT} EN/IEC 60947-2 – Appendix H (double fault in IT system): 1,5 kA at 400 V ~ and 3 kA at 230 V~
. In accordance with Icn1 EN/IEC 60898-1: 4,5 kA at 230 V ~ and 10 kA at 127V~

Breaking capacity:

Standard	Breaking capacity	Voltage between poles	Breaking capacity
EN/IEC 60898-1	Ics	127 V	**6 kA**
	Icn		**6 kA**
	Ics	230 V	**4,5 kA**
	Icn		**4,5 kA**
EN/IEC 60947-2	Icu	230 V	**6 kA**
	Ics		**75% Icu**

Isolation distance:
. The distance between the contacts is greater than 5.5 mm with the handle in the open position.
. The MCB is suitable for isolation in accordance with standard EN/IEC 60898-1.

5. GENERAL CHARACTERISTICS *(continued)*

Insulation voltage:
. Ui = 250 V in accordance with standard EN/IEC 60898-1

Degree of pollution:
. 2 in accordance with EN/IEC 60898-1

Dielectric strength:
. 2000 V

Rated impulse withstand voltage:
. Uimp = 4 kV

Degree or class of protection:
. Terminals protected against direct contact. Class of protection against solid objects and liquids (wired device): IP20 in accordance with standards IEC 529 – EN 60529 and NF 20-010
. Front panel protected against direct contact: IP40
. Class II in relation to metallic conductive parts
. Class of protection against mechanical impacts IK02 in accordance with standard EN 62262.

Plastic materials:
. Polyamide and P.B.T.

Enclosure heat and fire resistance:
. Resistance to glow wire tests at 960°C, in accordance with standard EN/IEC 60898-1
. Classification V2, in accordance with standard UL94

Higher heating potential:
. The heat potential is assessed at: 1.35 MJ

Closing and opening force via the handle:
. 2 N on opening
. 9 N on closing

Mechanical endurance:
. Compliant with standard EN/IEC 60898-1
. Tested with 20000 operations with no load

Electrical endurance:
. Compliant with standard EN/IEC 60898-1
. Tested with 10000 operations with load (In x Cos φ 0.9)

Sinusoidal vibration resistance in accordance with IEC 60068.2.6:
. Axes: x – y – z
. Frequency: 10 to 55 Hz
. Acceleration: 3g (1g = 9.81m.s^{-2})

Resistance to tremors:
. In accordance with standard EN/IEC 60898-1

Ambient temperatures:
. Operation: from - 25°C to + 70°C
. Storage: from - 40°C to + 70°C

DC operation:
. 60 V DC:
- Icn = 4500 A in accordance with standard EN/IEC 60898-1
- Magnetic threshold overrating:
  C curve: 5 to 15 In

5. GENERAL CHARACTERISTICS *(continued)*

Frequency:

. Operation at 400 Hz: yes
. Magnetic tripping depending on the frequency
- from 16 $^{2/3}$ Hz to 60 Hz: no correction
- 400 Hz: the magnetic tripping threshold increases by 45%

Packaged volume:

Packaging	Volume (dm^3)
Per 1	**0.195**
Per 10	**1.62**

Average unit weight per catalogue number:

. 0.11 kg

Derating of MCBs function of the number of devices placed side by side:

When several MCBs are installed side by side and operate simultaneously, the heat dissipation of one pole is limited. This results in an increased operating temperature for the circuit breakers which may cause false tripping. Applying the following coefficients to the operating currents is recommended.

Number of MCBs side by side	Coefficient
2 - 3	**0.9**
4 - 5	**0.8**
6 - 9	**0.7**
≥ 10	**0.6**

These values are given in the IEC 60439-1 recommendation and NF C 63421 and EN 60439-1 standards.
In order to avoid having to use these coefficients there must be good ventilation and the devices must be kept apart using the spacing elements Cat. No. 4 063 07 (0.5 module).

Derating of MCBs in the event of use with fluorescent tubes:

Electronic or ferromagnetic ballasts provide a high inrush current for a very short time. These currents are liable to cause tripping of the circuit breakers.
The maximum number of ballasts per MCB stated by the lamp and ballast manufacturers in their catalogues should be taken into account during installation.

Influence of the altitude:

	≤2000 m	3000 m	4000 m	5000 m
Dielectric strength	**2000 V**	**1750 V**	**1500 V**	**1250 V**
Maximum opereting voltage	**230 V**	**230 V**	**230 V**	**230 V**
Derating at 30°C	**none**	**none**	**none**	**none**

Power dissipated in W for the phase pole in In:

. MCBs in In/Un

Rated current	1 A	2 A	3 A	4 A	6 A	10 A	13A	16 A	20 A	25 A	32 A	40 A
P(W) Phase pole	**2.4**	**2.4**	**2.1**	**2.6**	**2.5**	**1.6**	**3.1**	**3.3**	**4**	**4.2**	**3.3**	**5.6**
P(W) Neutral pole	**0.003**	**0.02**	**0.03**	**0.05**	**0.1**	**0.3**	**0.6**	**1.1**	**1.2**	**1.1**	**1.6**	**2.8**

5. GENERAL CHARACTERISTICS *(continued)*

Derating of MCBs depending on the ambient temperature:

. The nominal characteristics of a circuit breaker are modified depending on the ambient temperature which prevails in the cabinet or enclosure where the MCBs is located.
. Reference temperature: 30°C in accordance with standard EN/IEC 60898-1.

In (A)	-25 °C	-10 °C	0 °C	10 °C	20 °C	30 °C	40 °C	50 °C	60 °C	70 °C
1	1.25	1.2	1.15	1.1	1.05	1	0.95	0.9	0.85	0.8
2	2.5	2.4	2.3	2.2	2.1	2	1.9	1.8	1.7	1.6
3	3.75	3.6	3.45	3.3	3.15	3	2.8	2.7	2.55	2.4
4	5	4.8	4.6	4.4	4.2	4	3.8	3.6	3.4	3.2
6	7.5	7.2	6.9	6.6	6.3	6	5.7	5.4	5.1	4.8
10	12.5	12	11.5	11	10.5	10	9.5	9	8.5	8
13	16.25	15.6	14.95	14.3	13.65	13	12.35	11.7	11.05	10.4
16	20	19.2	18.4	17.6	16.8	16	15.2	14.4	13.6	12.8
20	25	24	23	22	21	20	19	18	17	16
25	31.25	30	28.7	27.5	26.2	25	23.7	22.5	21.2	20
32	40	38.4	36.8	35.2	33.6	32	30.4	28.8	27.2	25.6
40	50	48	46	44	42	40	38	36	34	32

Association and coordination of a MCB with a protective device located upstream:

This association allows a device's breaking capacity to be increased by combining it with another protective device placed upstream.
This combination makes it possible to use a downstream device with a breaking capacity which is lower than the maximum prospective short-circuit current at its installation point.

Association and coordination with upstream fuses:

. Three-phase network (+N) 230/400 V or 240/415 V in accordance with standard EN/IEC 60947-2
. TT neutral earthing or TNS system

		Upstream fuse									
		gG and aM types									
Downstream MCB		≤20 A	25 A	32 A	40 A	50 A	63 A	80 A	100 A	125 A	160 A
DX³ P+N 4500 / 6 kA C curve	≤ 6 A	50 kA	50 kA	50 kA	50 kA	50 kA	25 kA	25 kA	25 kA	25 kA	25 kA
	10 A	50 kA	50 kA	50 kA	50 kA	50 kA	25 kA	25 kA	25 kA	25 kA	25 kA
	13 A	50 kA	50 kA	50 kA	50 kA	50 kA	25 kA	25 kA	25 kA	25 kA	25 kA
	16 A	50 kA	50 kA	50 kA	50 kA	50 kA	25 kA	25 kA	25 kA	25 kA	25 kA
	20 A	-	50 kA	50 kA	50 kA	50 kA	25 kA	25 kA	25 kA	25 kA	25 kA
	25 A	-	-	50 kA	50 kA	50 kA	25 kA	25 kA	25 kA	25 kA	16 kA
	32 A	-	-	-	50 kA	50 kA	25 kA	25 kA	25 kA	25 kA	16 kA
	40 A	-	-	-	-	50 kA	25 kA	25 kA	25 kA	25 kA	16 kA

5. GENERAL CHARACTERISTICS *(continued)*

Association and coordination with upstream MCBs:

. Three-phase network (+N) 230/400 V or 240/415 V in accordance with standard EN/IEC 60947-2

. TT neutral earthing or TNS system

		Upstream MCB								
		DX³ P+N 1 module					DX³ 6000 / 10 kA B, C and D curves			
		DX³ 6000 / 10 kA B and C curves				DX³ 10000 / 16 kA C curve				
Downstream MCB		≤20 A	25 A	32 A	40 A	≤20 A	≤32 A	40 A	50 A	63 A
DX³ 4500 / 6 kA C curve	≤ 6 A	**10 kA**	**10 kA**	**10 kA**	**10 kA**	**16 kA**	**25 kA**	**25 kA**	**25 kA**	**25 kA**
	10 A	**10 kA**	**10 kA**	**10 kA**	**10 kA**	**16 kA**	**25 kA**	**25 kA**	**25 kA**	**25 kA**
	13 A	**10 kA**	**10 kA**	**10 kA**	**10 kA**	**16 kA**	**25 kA**	**25 kA**	**25 kA**	**25 kA**
	16 A	**10 kA**	**10 kA**	**10 kA**	**10 kA**	**16 kA**	**25 kA**	**25 kA**	**25 kA**	**25 kA**
	20 A	-	**10 kA**	**10 kA**	**10 kA**	-	**25 kA**	**25 kA**	**25 kA**	**25 kA**
	25 A	-	-	**10 kA**	**10 kA**	-	**25 kA**	**25 kA**	**25 kA**	**25 kA**
	32 A	-	-	-	**10 kA**	-	-	**25 kA**	**25 kA**	**25 kA**
	40 A	-	-	-	-		-	-	**25 kA**	**25 kA**

		Upstream MCB							
		DX³ 10000 / 16 kA B, C and D curves							
Downstream MCB		≤ 25 A	32 A	40 A	50 A	63 A	80 A	100 A	125 A
DX³ 4500 / 6 kA C curve	≤ 6 A	**32 kA**	**32 kA**	**25 kA**	**25 kA**	**25 kA**	**25 kA**	**25 kA**	**25 kA**
	10 A	**32 kA**	**32 kA**	**25 kA**	**25 kA**	**25 kA**	**25 kA**	**25 kA**	**25 kA**
	13 A	**32 kA**	**32 kA**	**25 kA**	**25 kA**	**25 kA**	**25 kA**	**25 kA**	**25 kA**
	16 A	**32 kA**	**32 kA**	**25 kA**	**25 kA**	**25 kA**	**25 kA**	**25 kA**	**25 kA**
	20 A	**32 kA**	**32 kA**	**25 kA**	**25 kA**	**25 kA**	**25 kA**	**25 kA**	**25 kA**
	25 A	-	**32 kA**	**25 kA**	**25 kA**	**25 kA**	**25 kA**	**25 kA**	**25 kA**
	32 A	-	-	**25 kA**	**25 kA**	**25 kA**	**25 kA**	**25 kA**	**25 kA**
	40 A	-	-	-	**25 kA**	**25 kA**	**25 kA**	**25 kA**	**25 kA**

5. GENERAL CHARACTERISTICS *(continued)*

Association and coordination with upstream MCBs:

. Three-phase network (+N) 230/400 V or 240/415 V in accordance with standard EN/IEC 60947-2

. TT neutral earthing or TNS system

		Upstream MCB							
		DX³ 25 kA B, C and D curves							
Downstream MCB		≤ 25 A	32 A	40 A	50 A	63 A	80 A	100 A	125 A
DX³ 4500 / 6 kA C curve	≤ 6 A	50 kA	50 kA	25 kA	25 kA	25 kA	25 kA	25 kA	25 kA
	10 A	50 kA	50 kA	25 kA	25 kA	25 kA	25 kA	25 kA	25 kA
	13 A	50 kA	50 kA	25 kA	25 kA	25 kA	25 kA	25 kA	25 kA
	16 A	50 kA	50 kA	25 kA	25 kA	25 kA	25 kA	25 kA	25 kA
	20 A	50 kA	50 kA	25 kA	25 kA	25 kA	25 kA	25 kA	25 kA
	25 A	-	50 kA	25 kA	25 kA	25 kA	25 kA	25 kA	25 kA
	32 A	-	-	25 kA	25 kA	25 kA	25 kA	25 kA	25 kA
	40 A	-	-	-	25 kA	25 kA	25 kA	25 kA	25 kA

		Upstream MCB					
		DX³ 36 kA C curve					
Downstream MCB		≤ 25 A	32 A	40 A	50 A	63 A	80 A
DX³ 4500 / 6 kA C curve	≤ 6 A	50 kA	50 kA	25 kA	25 kA	25 kA	25 kA
	10 A	50 kA	50 kA	25 kA	25 kA	25 kA	25 kA
	13 A	50 kA	50 kA	25 kA	25 kA	25 kA	25 kA
	16 A	50 kA	50 kA	25 kA	25 kA	25 kA	25 kA
	20 A	50 kA	50 kA	25 kA	25 kA	25 kA	25 kA
	25 A	-	50 kA	25 kA	25 kA	25 kA	25 kA
	32 A	-	-	25 kA	25 kA	25 kA	25 kA
	40 A	-	-	-	25 kA	25 kA	25 kA

5. GENERAL CHARACTERISTICS *(continued)*

Association and coordination with upstream MCBs:

. Three-phase network (+N) 230/400 V or 240/415 V in accordance with standard EN/IEC 60947-2
. TT neutral earthing or TNS system

		Upstream MCB				
		DX³ 50 kA B, C and D curves				
Downstream MCB		≤ 25 A	32 A	40 A	50 A	63 A
DX³ 4500 / 6 kA C curves	≤ 6 A	**50 kA**	**50 kA**	**25 kA**	**25 kA**	**25 kA**
	10 A	**50 kA**	**50 kA**	**25 kA**	**25 kA**	**25 kA**
	13 A	**50 kA**	**50 kA**	**25 kA**	**25 kA**	**25 kA**
	16 A	**50 kA**	**50 kA**	**25 kA**	**25 kA**	**25 kA**
	20 A	**50 kA**	**50 kA**	**25 kA**	**25 kA**	**25 kA**
	25 A	-	**50 kA**	**25 kA**	**25 kA**	**25 kA**
	32 A	-	-	**25 kA**	**25 kA**	**25 kA**
	40 A	-	-	-	**25 kA**	**25 kA**

Association and coordination with upstream Moulded Case Circuit Breakers (MCCBs):

. Three-phase network (+N) 230/400 V or 240/415 V in accordance with standard EN/IEC 60947-2
. TT neutral earthing or TNS system

		Upstream MCCB							
		DPX³ 160 16 kA							
Downstream MCCB		16 A	25 A	40 A	63 A	80 A	100 A	125 A	160 A
DX³ 4500 / 6 kA C curve	≤ 6 A	**22 kA**	**22 kA**	**22 kA**	**22 kA**	**22 kA**	**22 kA**	**22 kA**	**22 kA**
	10 A	**22 kA**	**22 kA**	**22 kA**	**22 kA**	**22 kA**	**22 kA**	**22 kA**	**22 kA**
	13 A	**22 kA**	**22 kA**	**22 kA**	**22 kA**	**22 kA**	**22 kA**	**22 kA**	**22 kA**
	16 A	-	**22 kA**	**22 kA**	**22 kA**	**22 kA**	**22 kA**	**22 kA**	**22 kA**
	20 A	-	**22 kA**	**22 kA**	**22 kA**	**22 kA**	**22 kA**	**22 kA**	**22 kA**
	25 A	-	-	**22 kA**	**22 kA**	**22 kA**	**22 kA**	**22 kA**	**22 kA**
	32 A	-	-	**16 kA**	**16 kA**	**16 kA**	**16 kA**	**16 kA**	**16 kA**
	40 A	-	-	-	**16 kA**	**16 kA**	**16 kA**	**16 kA**	**16 kA**

5. GENERAL CHARACTERISTICS *(continued)*

Association and coordination with upstream Moulded Case Circuit Breakers (MCCBs):

. Three-phase network (+N) 230/400 V or 240/415 V in accordance with standard EN/IEC 60947-2

. TT neutral earthing or TNS system

		Upstream MCCB							
		DPX³ 160 25 kA, 36 kA & 50 kA							
Downstream MCB		16 A	25 A	40 A	63 A	80 A	100 A	125 A	160 A
DX³ 4500 / 6 kA C curve	≤ 6 A	**30 kA**	**30 kA**	**30 kA**	**30 kA**	**30 kA**	**30 kA**	**30 kA**	**30 kA**
	10 A	**30 kA**	**30 kA**	**30 kA**	**30 kA**	**30 kA**	**30 kA**	**30 kA**	**30 kA**
	13 A	**30 kA**	**30 kA**	**30 kA**	**30 kA**	**30 kA**	**30 kA**	**30 kA**	**30 kA**
	16 A	-	**30 kA**	**30 kA**	**30 kA**	**30 kA**	**30 kA**	**30 kA**	**30 kA**
	20 A	-	**30 kA**	**30 kA**	**30 kA**	**30 kA**	**30 kA**	**30 kA**	**30 kA**
	25 A	-	-	**25 kA**	**25 kA**	**25 kA**	**25 kA**	**25 kA**	**25 kA**
	32 A	-	-	**16 kA**	**16 kA**	**16 kA**	**16 kA**	**16 kA**	**16 kA**
	40 A	-	-	-	**16 kA**	**16 kA**	**16 kA**	**16 kA**	**16 kA**

		Upstream MCCB						
		DPX 250 ER ≤ 50 kA			DPX 250 ER AB 36 kA			
Downstream MCB		100 A	160 A	250 A	90 A	130 A	170 A	240 A
DX³ 4500 / 6 kA C curve	≤ 6 A	**30 kA**	**30 kA**	**30 kA**	**30 kA**	**30 kA**	**30 kA**	**30 kA**
	10 A	**30 kA**	**30 kA**	**30 kA**	**30 kA**	**30 kA**	**30 kA**	**30 kA**
	13 A	**30 kA**	**30 kA**	**30 kA**	**30 kA**	**30 kA**	**30 kA**	**30 kA**
	16 A	**25 kA**	**25 kA**	**25 kA**	**25 kA**	**25 kA**	**25 kA**	**25 kA**
	20 A	**25 kA**	**25 kA**	**25 kA**	**25 kA**	**25 kA**	**25 kA**	**25 kA**
	25 A	**20 kA**	**20 kA**	**20 kA**	**20 kA**	**20 kA**	**20 kA**	**20 kA**
	32 A	**10 kA**	**10 kA**	**10 kA**	**10 kA**	**10 kA**	**10 kA**	**10 kA**
	40 A	**10 kA**	**10 kA**	**10 kA**	**10 kA**	**10 kA**	**10 kA**	**10 kA**

5. GENERAL CHARACTERISTICS *(continued)*

Association and coordination with upstream Moulded Case Circuit Breakers (MCCBs):

. Three-phase network (+N) 230/400 V or 240/415 V in accordance with standard EN/IEC 60947-2

. TT neutral earthing or TNS system

		Upstream MCB							
		DPX³ 250 ≤ 70 kA Thermal-magnetic				DPX³ 250 ≤ 70 kA Electronic			
Downstream MCB		100 A	160 A	200 A	250 A	40 A	100 A	160 A	250 A
DX³ 4500 / 6 kA C curve	≤ 6 A	**30 kA**	**30 kA**	**30 kA**	**30 kA**	**30 kA**	**30 kA**	**30 kA**	**30 kA**
	10 A	**30 kA**	**30 kA**	**30 kA**	**30 kA**	**30 kA**	**30 kA**	**30 kA**	**30 kA**
	13 A	**30 kA**	**30 kA**	**30 kA**	**30 kA**	**30 kA**	**30 kA**	**30 kA**	**30 kA**
	16 A	**30 kA**	**30 kA**	**30 kA**	**30 kA**	**30 kA**	**30 kA**	**30 kA**	**30 kA**
	20 A	**30 kA**	**30 kA**	**30 kA**	**30 kA**	**30 kA**	**30 kA**	**30 kA**	**30 kA**
	25 A	**25 kA**	**25 kA**	**25 kA**	**25 kA**	**25 kA**	**25 kA**	**25 kA**	**25 kA**
	32 A	**16 kA**	**16 kA**	**16 kA**	**16 kA**	**16 kA**	**16 kA**	**16 kA**	**16 kA**
	40 A	**16 kA**	**16 kA**	**16 kA**	**16 kA**	**-**	**16 kA**	**16 kA**	**16 kA**

		Upstream MCB									
		DPX 250 36 kA / DPX -H 250 70 kA / DPX -L 250 100 kA Thermal-magnetic						DPX 250 36 kA / DPX -H 250 70 kA / DPX -L 250 100 kA Electronic			
Downstreaml MCB		25 A	40 A	63 A	100 A	160 A	250 A	40 A	100 A	160 A	250 A
DX³ 4500 / 6 kA C curve	≤ 6 A	**30 kA**	**30 kA**	**30 kA**	**30 kA**	**30 kA**	**30 kA**	**30 kA**	**30 kA**	**30 kA**	**30 kA**
	10 A	**30 kA**	**30 kA**	**30 kA**	**30 kA**	**30 kA**	**30 kA**	**30 kA**	**30 kA**	**30 kA**	**30 kA**
	13 A	**30 kA**	**30 kA**	**30 kA**	**30 kA**	**30 kA**	**30 kA**	**30 kA**	**30 kA**	**30 kA**	**30 kA**
	16 A	**30 kA**	**30 kA**	**30 kA**	**30 kA**	**30 kA**	**30 kA**	**30 kA**	**30 kA**	**30 kA**	**30 kA**
	20 A	**30 kA**	**30 kA**	**30 kA**	**30 kA**	**30 kA**	**30 kA**	**30 kA**	**30 kA**	**30 kA**	**30 kA**
	25 A	**-**	**25 kA**	**25 kA**	**25 kA**	**25 kA**	**25 kA**	**25 kA**	**25 kA**	**25 kA**	**25 kA**
	32 A	**-**	**16 kA**	**16 kA**	**16 kA**	**16 kA**	**16 kA**	**16 kA**	**16 kA**	**16 kA**	**16 kA**
	40 A	**-**	**-**	**16 kA**	**16 kA**	**16 kA**	**16 kA**	**-**	**16 kA**	**16 kA**	**16 kA**

5. GENERAL CHARACTERISTICS *(continued)*

Association and coordination with upstream Moulded Case Circuit Breakers (MCCBs):

. Three-phase network (+N) 230/400 V or 240/415 V in accordance with standard EN/IEC 60947-2

. TT neutral earthing or TNS system

		Upstream MCCB	
		DPX 400 AB 36 kA	
Downstream MCB		320 A	400 A
DX³ 4500 / 6 kA C curve	≤ 6 A	**25 kA**	**25 kA**
	10 A	**25 kA**	**25 kA**
	13 A	**25 kA**	**25 kA**
	16 A	**25 kA**	**25 kA**
	20 A	**25 kA**	**25 kA**
	25 A	**25 kA**	**25 kA**
	32 A	**16 kA**	**16 kA**
	40 A	**16 kA**	**16 kA**

		Upstream MCCB								
		DPX 630 36 kA / DPX -H 630 70 kA / DPX -L 630 100 kA Thermal-magnetic					DPX 630 36 kA / DPX -H 630 70 kA / DPX -L 630 100 kA Electronic			
Downstream MCB		250 A	320 A	400 A	500 A	630 A	160 A	250 A	400 A	630 A
DX³ 4500 / 6 kA C curve	≤ 6 A	**25 kA**	**25 kA**	**25 kA**	**25 kA**	**25 kA**	**25 kA**	**25 kA**	**25 kA**	**25 kA**
	10 A	**25 kA**	**25 kA**	**25 kA**	**25 kA**	**25 kA**	**25 kA**	**25 kA**	**25 kA**	**25 kA**
	13 A	**25 kA**	**25 kA**	**25 kA**	**25 kA**	**25 kA**	**25 kA**	**25 kA**	**25 kA**	**25 kA**
	16 A	**25 kA**	**25 kA**	**25 kA**	**25 kA**	**25 kA**	**25 kA**	**25 kA**	**25 kA**	**25 kA**
	20 A	**25 kA**	**25 kA**	**25 kA**	**25 kA**	**25 kA**	**25 kA**	**25 kA**	**25 kA**	**25 kA**
	25 A	**25 kA**	**25 kA**	**25 kA**	**25 kA**	**25 kA**	**25 kA**	**25 kA**	**25 kA**	**25 kA**
	32 A	**16 kA**	**16 kA**	**16 kA**	**16 kA**	**16 kA**	**16 kA**	**16 kA**	**16 kA**	**16 kA**
	40 A	**16 kA**	**16 kA**	**16 kA**	**16 kA**	**16 kA**	**16 kA**	**16 kA**	**16 kA**	**16 kA**

5. GENERAL CHARACTERISTICS *(continued)*

Association and coordination with upstream Moulded Case Circuit Breakers (MCCBs):

. Three-phase network (+N) 230/400 V or 240/415 V in accordance with standard EN/IEC 60947-2
. TT neutral earthing or TNS system

		Upstream MCCB	
		DPX 1250 50 kA / DPX –H 1250 70 kA / DPX -L 1250 100 kA	DPX 1600 36 kA / DPX -H 1600 70 kA Electronic
Downstream MCB		500 A to 1250 A	630 A to 1600 A
DX³ 4500 / 6 kA C curve	≤ 6 A	**25 kA**	**25 kA**
	10 A	**25 kA**	**25 kA**
	13 A	**25 kA**	**25 kA**
	16 A	**25 kA**	**25 kA**
	20 A	**25 kA**	**25 kA**
	25 A	**25 kA**	**25 kA**
	32 A	**10 kA**	**10 kA**
	40 A	**10 kA**	**10 kA**

Selectivity between two levels of protection

. The downstream MCB must always have a magnetic threshold and a rated current lower than those of the upstream protection.
. Selectivity or Discrimination is said to be total (T) if there is discrimination up to the value of breaking capacity (in accordance with standard EN/IEC 60947-2) of the downstream MCB.

Discrimination with upstream fuses:

. Discrimination limit with a voltage of 230 V ~ (Values in A)

		Upstream fuse							
		gG cartridge							
Downstream MCB		32 A	40 A	50 A	63 A	80 A	100 A	125 A	160 A
DX³ 4500 / 6 kA C curve	≤ 6 A	**1300**	**1900**	**2500**	**4000**	**4600**	**T**	**T**	**T**
	10 A	**-**	**1600**	**2200**	**3200**	**3600**	**T**	**T**	**T**
	13 A	**-**	**1400**	**1800**	**2600**	**3000**	**T**	**T**	**T**
	16 A	**-**	**1400**	**1800**	**2600**	**3000**	**5600**	**T**	**T**
	20 A	**-**	**1200**	**1500**	**2200**	**2500**	**4600**	**T**	**T**
	25 A	**-**	**-**	**1300**	**2000**	**2200**	**4100**	**5500**	**T**
	32 A	**-**	**-**	**1200**	**1700**	**1900**	**3500**	**4500**	**T**
	40 A	**-**	**-**	**-**	**-**	**1700**	**3000**	**4000**	**T**

. T = Total discrimination

5. GENERAL CHARACTERISTICS *(continued)*

Discrimination with upstream fuses:

. Discrimination limit with a voltage of 230 V ~ (Values in A)

		Upstream fuse								
		aM cartridge								
Downstream MCB		25 A	32 A	40 A	50 A	63 A	80 A	100 A	125 A	160 A
DX³ 4500 / 6 kA C curve	≤ 6 A	1000	1600	2100	3200	T	T	T	T	T
	10 A	-	1100	1700	2500	5000	T	T	T	T
	13 A	-	1000	1400	2100	4000	T	T	T	T
	16 A	-	1000	1400	2100	4000	T	T	T	T
	20 A	-	-	1300	1800	3400	5100	T	T	T
	25 A	-	-	1100	1600	3000	4500	T	T	T
	32 A	-	-	-	1300	2400	3800	5000	T	T
	40 A	-	-	-	-	2100	3100	4200	T	T

Discrimination with upstream MCBs:

. Discrimination limit with a voltage of 230 V ~ (Values in A)

		Upstream MCB											
		DX³ 4500 / 6 kA - DX³ 6000 / 10 kA - DX³ 10000 / 16 kA B curve											
Downstream MCB		10 A	13 A	16 A	20 A	25 A	32 A	40 A	50 A	63 A	80 A	100 A	125 A
DX³ 4500 / 6 kA C curve	≤ 6 A	-	52	64	80	100	128	160	200	252	4000	T	T
	10 A	-	-	-	80	100	128	160	200	252	3000	5000	T
	13 A	-	-	-	-	100	128	160	200	252	2500	4000	6000
	16 A	-	-	-	-	-	128	160	200	252	2000	3600	5500
	20 A	-	-	-	-	-	-	160	200	252	1600	3000	4000
	25 A	-	-	-	-	-	-	-	200	252	1300	2400	3300
	32 A	-	-	-	-	-	-	-	-	252	1000	1800	2700
	40 A	-	-	-	-	-	-	-	-	-	800	1600	2400

. T = Total discrimination

. Selectivity or Discrimination is said to be total (T) if there is discrimination up to the value of breaking capacity (in accordance with standard EN/IEC 60947-2) of the downstream MCB.

5. GENERAL CHARACTERISTICS *(continued)*

Discrimination with upstream MCBs:

. Discrimination limit with a voltage of 230 V ~ (Values in A)

		Upstream MCB											
		DX³ 3000 - DX³ 4500 / 4,5 kA - DX³ 4500 / 6 kA - DX³ 6000 / 10 kA - DX³ 10000 / 16 kA C curve											
Downstream MCB		10 A	13 A	16 A	20 A	25 A	32 A	40 A	50 A	63 A	80 A	100 A	125 A
DX³ 4500 / 6 kA C curve	≤ 6 A	75	98	120	150	187	240	300	375	472	4000	T	T
	10 A	-	98	120	150	187	240	300	375	472	3000	5000	T
	13 A	-	-	120	150	187	240	300	375	472	2500	4000	6000
	16 A	-	-	-	150	187	240	300	375	472	2000	3600	5500
	20 A	-	-	-	-	187	240	300	375	472	1600	3000	4000
	25 A	-	-	-	-	-	240	300	375	472	1300	2400	3300
	32 A	-	-	-	-	-	-	300	375	472	1000	1800	2700
	40 A	-	-	-	-	-	-	-	375	472	800	1600	2400

		Upstream MCB											
		DX³ 4500 / 6 kA - DX³ 6000A - DX³ 6000 / 10 kA - DX³ 10000 / 16 kA D curve											
Downstream MCB		10 A	13 A	16 A	20 A	25 A	32 A	40 A	50 A	63 A	80 A	100 A	125 A
DX³ 4500 / 6 kA courbe C	≤ 6 A	120	156	192	240	300	384	480	600	756	4000	T	T
	10 A	-	-	192	240	300	384	480	600	756	3000	5000	T
	13 A	-	-	-	240	300	384	480	600	756	2500	4000	6000
	16 A	-	-	-	240	300	384	480	600	756	2000	3600	5500
	20 A	-	-	-	-	300	384	480	600	756	1600	3000	4000
	25 A	-	-	-	-	-	384	480	600	756	1300	2400	3300
	32 A	-	-	-	-	-	-	480	600	756	1100	1450	2700
	40 A	-	-	-	-	-	-	-	600	756	1000	1250	2400

. T = Total discrimination

. Selectivity or Discrimination is said to be total (T) if there is discrimination up to the value of breaking capacity (in accordance with standard EN/IEC 60947-2) of the downstream MCB.

5. GENERAL CHARACTERISTICS *(continued)*

Discrimination with upstream MCBs:

. Discrimination limit with a voltage of 230 V ~ (Values in A)

		Upstream MCB										
		DX³ 25 kA B curve										
Downstream MCB		10 A	16 A	20 A	25 A	32 A	40 A	50 A	63 A	80 A	100 A	125 A
DX³ 4500 / 6 kA C curve	≤ 6 A	-	64	80	100	700	1200	1500	3000	4000	T	T
	10 A	-	-	80	100	500	700	1200	1800	3000	5000	T
	13 A	-	-	-	100	400	600	1000	1500	2500	4000	T
	16 A	-	-	-	-	300	500	700	1300	2000	3600	5500
	20 A	-	-	-	-	-	400	500	1000	1600	3000	4000
	25 A	-	-	-	-	-	-	500	800	1300	2400	3300
	32 A	-	-	-	-	-	-	500	600	1000	1800	2700
	40 A	-	-	-	-	-	-	-	600	800	1600	2400

		Upstream MCB										
		DX³ 25 kA C curve										
Downstream MCB		10 A	16 A	20 A	25 A	32 A	40 A	50 A	63 A	80 A	100 A	125 A
DX³ 4500 / 6 kA C curve	≤ 6 A	75	120	150	187	700	1200	1500	3000	4000	T	T
	10 A	-	120	150	187	500	700	1200	1800	3000	5000	T
	13 A	-	120	150	187	400	600	1000	1500	2500	4000	T
	16 A	-	-	150	187	300	500	700	1300	2000	3600	5500
	20 A	-	-	-	187	300	400	500	1000	1600	3000	4000
	25 A	-	-	-	-	240	400	500	800	1300	2400	3300
	32 A	-	-	-	-	-	300	500	600	1000	1800	2700
	40 A	-	-	-	-	-	-	400	600	800	1600	2400

. T = Total discrimination

. Selectivity or Discrimination is said to be total (T) if there is discrimination up to the value of breaking capacity (in accordance with standard EN/IEC 60947-2) of the downstream MCB.

5. GENERAL CHARACTERISTICS *(continued)*

Discrimination with upstream MCBs:

. Discrimination limit with a voltage of 230 V ~ (Values in A)

		Upstream MCB										
		DX³ 25 kA Courbe D										
Downstream MCB		10 A	16 A	20 A	25 A	32 A	40 A	50 A	63 A	80 A	100 A	125 A
DX³ 4500 / 6 kA C curve	≤ 6 A	120	192	240	500	700	1200	1500	3000	4000	T	T
	10 A	-	192	240	300	500	700	1200	1800	3000	5000	T
	13 A	-	120	150	187	400	600	1000	1500	2500	4000	T
	16 A	-	-	240	300	384	500	700	1300	2000	3600	5500
	20 A	-	-	-	300	384	480	600	1000	1600	3000	4000
	25 A	-	-	-	-	384	480	600	800	1300	2400	3300
	32 A	-	-	-	-	-	480	600	756	1100	1450	2700
	40 A	-	-	-	-	-	-	600	756	1000	1250	2400

		Upstream MCB							
		DX³ 50 kA B curve							
Downstream MCB		10 A	16 A	20 A	25 A	32 A	40 A	50 A	63 A
DX³ 4500 / 6 kA C curve	≤ 6 A	-	64	170	500	700	1200	1500	3000
	10 A	-	-	150	210	500	700	1000	1800
	13 A	-	-	-	200	400	600	1000	1500
	16 A	-	-	-	-	300	500	700	1300
	20 A	-	-	-	-	-	400	500	1000
	25 A	-	-	-	-	-	-	500	800
	32 A	-	-	-	-	-	-	500	600
	40 A	-	-	-	-	-	-	-	600

. T = Total discrimination

. Selectivity or Discrimination is said to be total (T) if there is discrimination up to the value of breaking capacity (in accordance with standard EN/IEC 60947-2) of the downstream MCB.

5. GENERAL CHARACTERISTICS *(continued)*

Discrimination with upstream MCBs:

. Discrimination limit with a voltage of 230 V ~ (Values in A)

		Upstream MCB								
		DX³ 50 kA C curve								
Downstream MCB		10 A	16 A	20 A	25 A	32 A	40 A	50 A	63 A	80 A
DX³ 4500 / 6 kA C curve	≤ 6 A	75	120	170	500	700	1200	1500	3000	4000
	10 A	-	120	150	210	500	700	1000	1800	3000
	13 A	-	120	150	200	400	600	1000	1500	2500
	16 A	-	-	150	187	300	500	700	1300	2000
	20 A	-	-	-	187	300	400	500	1000	1600
	25 A	-	-	-	-	240	400	500	800	1300
	32 A	-	-	-	-	-	300	500	600	1000
	40 A	-	-	-	-	-	-	400	600	800

		Upstream MCB							
		DX³ 50 kA D curve							
Downstream MCB		10 A	16 A	20 A	25 A	32 A	40 A	50 A	63 A
DX³ 4500 / 6 kA C curve	≤ 6 A	120	192	240	500	700	1200	1500	3000
	10 A	-	192	240	300	500	700	1000	1800
	13 A	-	-	240	300	400	600	1000	1500
	16 A	-	-	240	300	384	500	700	1300
	20 A	-	-	-	300	384	480	600	1000
	25 A	-	-	-	-	384	480	600	800
	32 A	-	-	-	-	-	480	600	756
	40 A	-	-	-	-	-	-	600	756

. T = Total discrimination

. Selectivity or Discrimination is said to be total (T) if there is discrimination up to the value of breaking capacity (in accordance with standard EN/IEC 60947-2) of the downstream MCB.

5. GENERAL CHARACTERISTICS *(continued)*

Discrimination with upstream Moulded Case Circuit Breakers (MCCBs):

Discrimination limit with a voltage of 230 V ~ (Values in A)

Downstream MCB	Upstream MCCB	
DX³ P+N 4500 / 6 kA C curve	DPX and DPX³ all models all ratings	DMX³ all models all ratings
	T	T

. T = Total discrimination

6. COMPLIANCE AND APPROVALS

In accordance with standards:

. EN/IEC 60898-1

Usage in special conditions:

. Category C compliant (testing temperature range from -25°C to +70°C, resistant to salt spray) in accordance with the classification defined in Appendix Q of standard IEC/EN 60947-1

Respect for the environment – Compliance with European Union Directives:

. Compliance with Directive 2002/95/EC of 27/01/03 known as "RoHS" which provides for a restriction on the use of dangerous substances such as lead, mercury, cadmium, hexavalent chromium and polybrominated biphenyl (PBB) and polybrominated diphenyl ether (PBDE) brominated flame retardants from 1st July 2006
. Compliance with the Directive 91/338/EEC of 18/06/91 and decree 94-647 of 27/07/04

Plastic materials:

. Halogen free plastic materials.
. Labelling of parts compliant with ISO 11469 and ISO 1043.

Packaging:

. Design and manufacture of packaging compliant with decree 98-638 of 20/07/98 and Directive 94/62/EC

Approvals obtained:

. France: NF

7. CURVES

Thermal-magnetic tripping curve range typical of C and D curve MCBs:

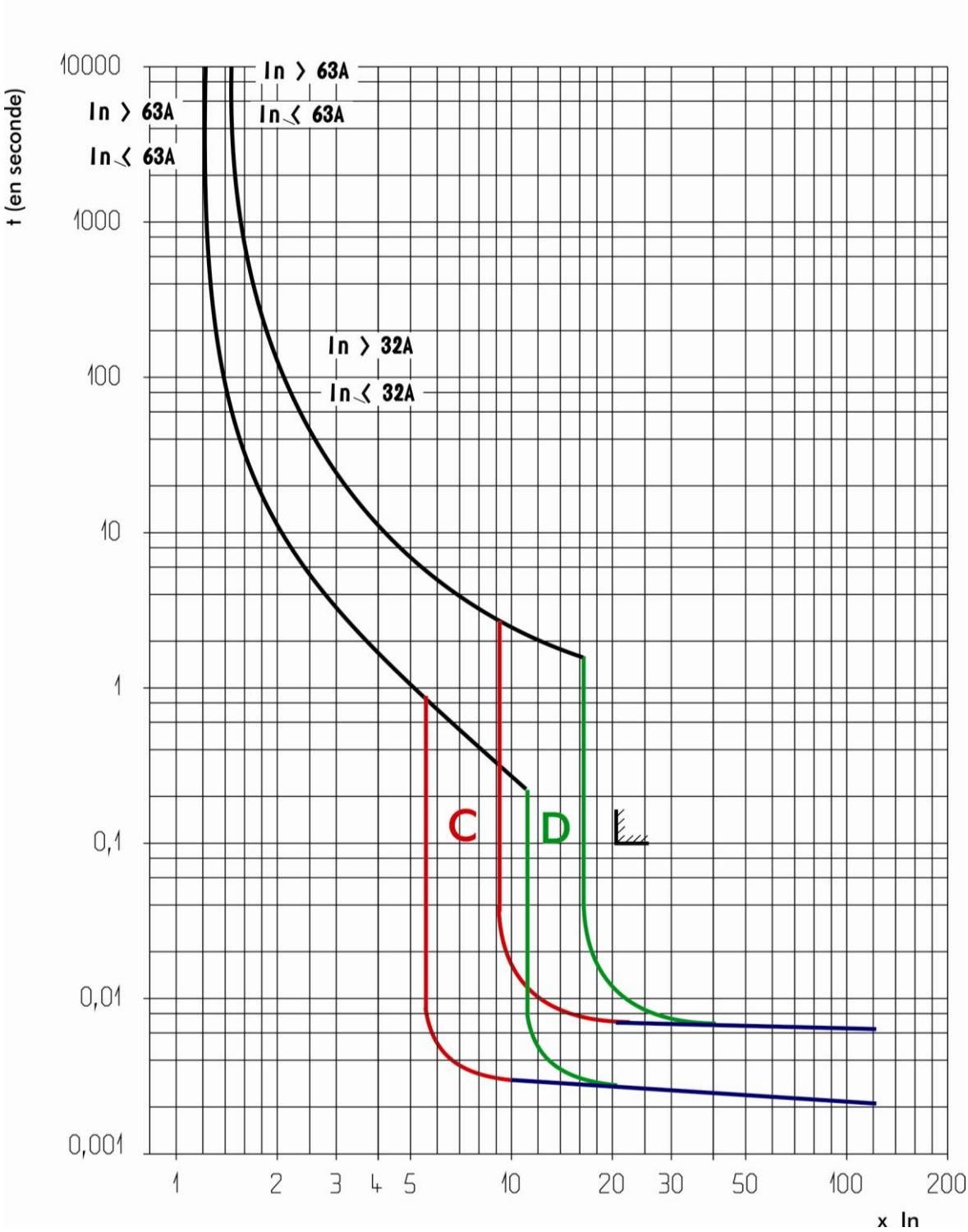

7. CURVES *(continued)*

Average thermal-magnetic tripping curves range typical of C curve MCBs:

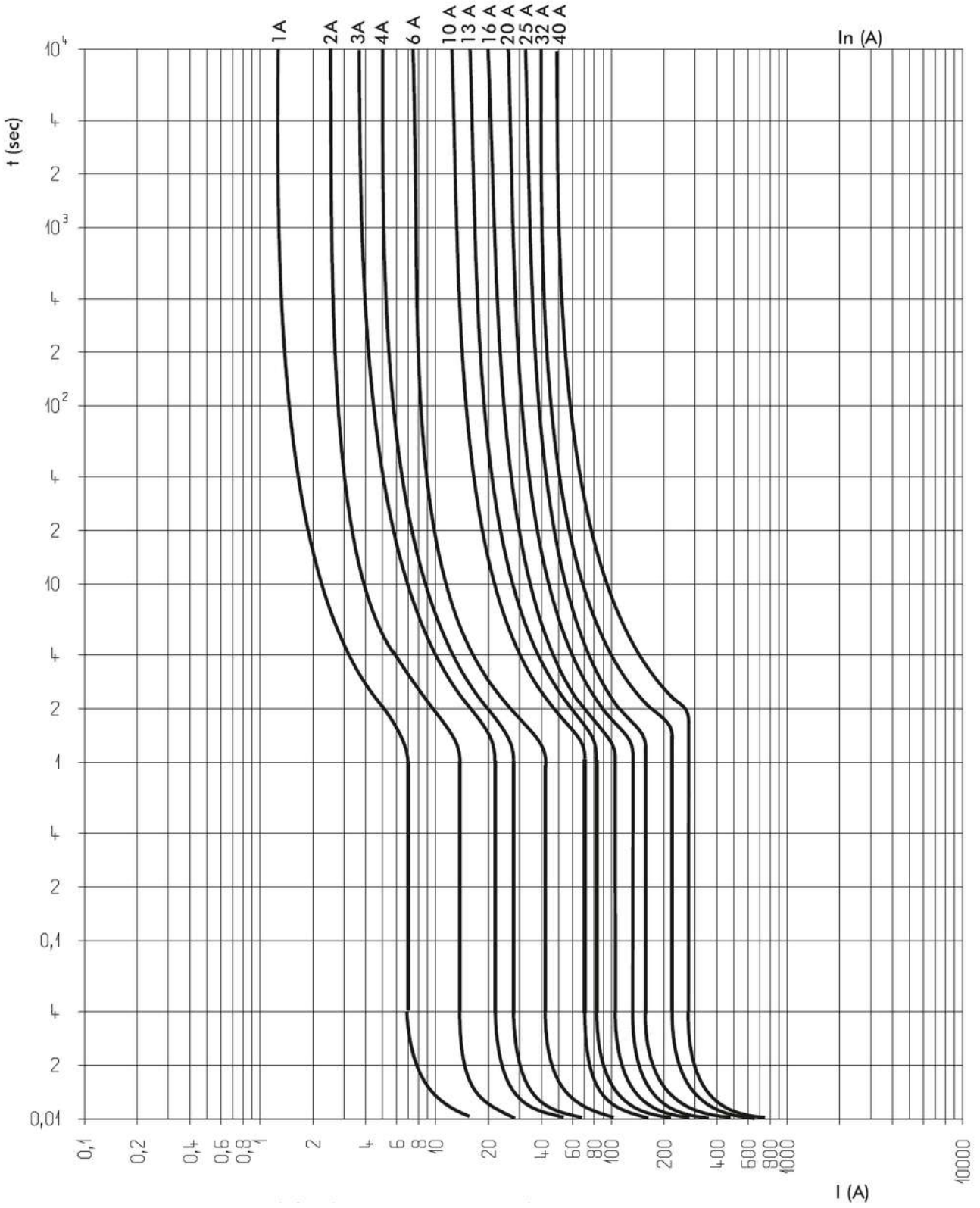

7. CURVES *(continued)*

Current limiting curves:

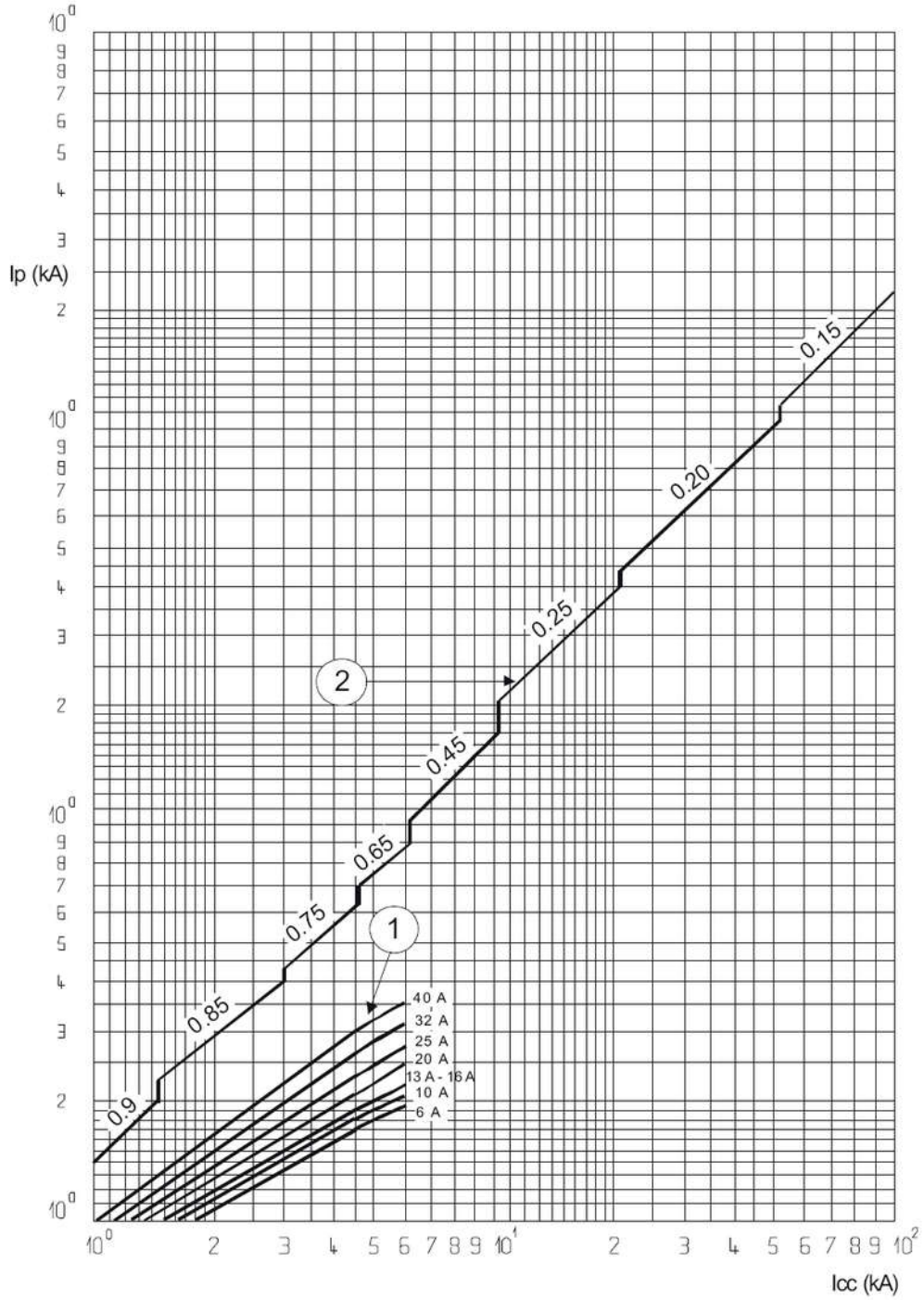

Icc = Prospective short-circuit symmetrical current (rms value in kA)
Ip = Maximum peak value (in kA)
1 = Short-circuit rms currents (max. peak)
2 = Unlimited peak currents (max.), corresponding to power factors shown above (0.15 to 0.9)
NB: For 1 ,2 ,3 and 4A rating, the limited values are less than 1kA

7. CURVES *(continued)*

Thermal stress limiting curves:

. C curve MCBs (230V/50Hz)

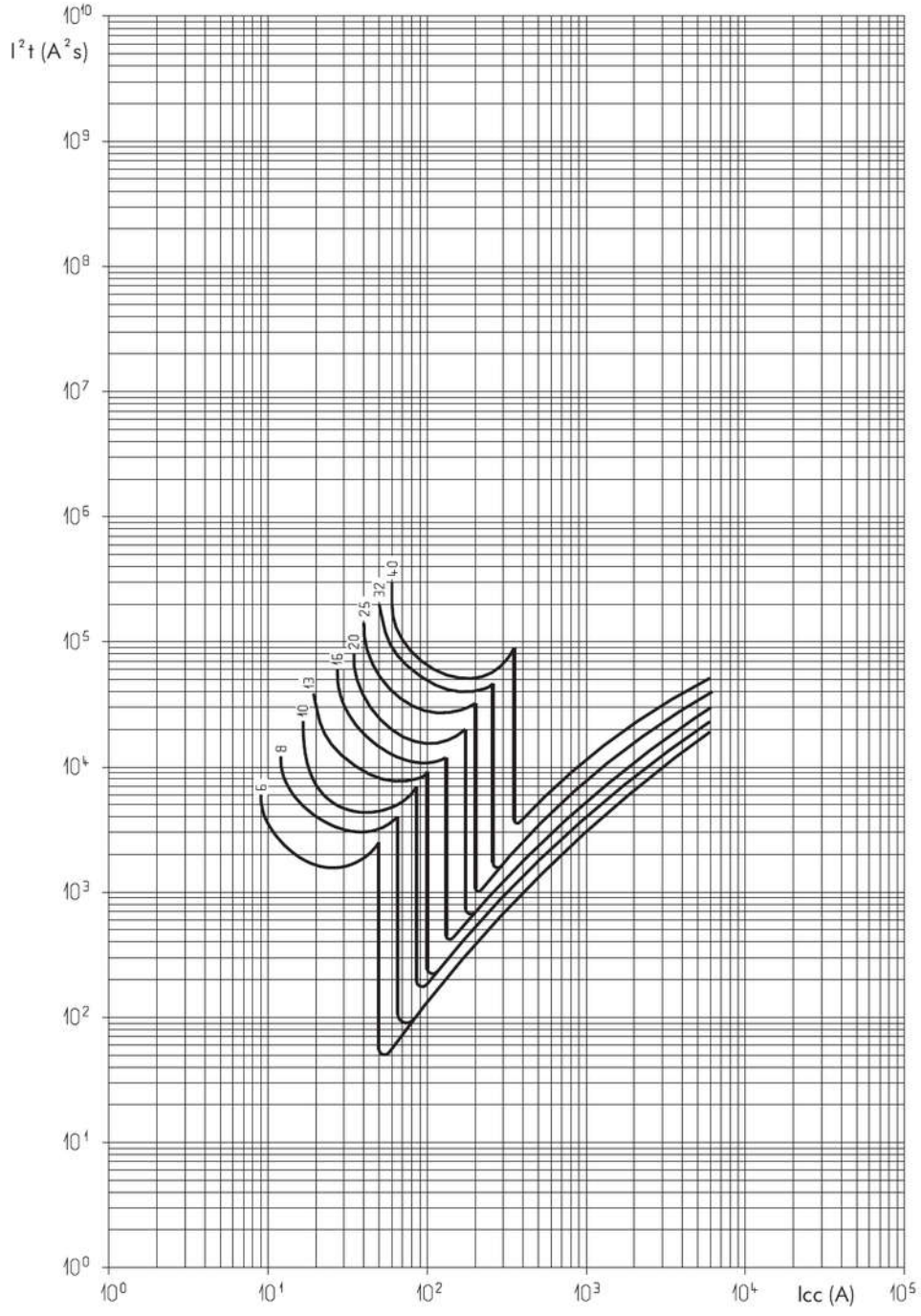

Icc = prospective short-circuit symmetrical current (rms value in A)
I^2t = limited thermal stress (in A^2s)
NB:
-The 3A rating limits to values less than 6000 A^2s
-The 2A rating limits to values less than 3000 A^2s
-The 1A rating limits to values less than 1000 A^2s

8. AUXILIARIES AND ACCESSORIES

Wiring accessories:

. Supply busbar:
- HX³ single-pole universal supply busbar (Cat. No. 4 049 26, 37)
- HX³ 4-pole "screw" busbar (Cat. No. 4 052 10) and 4-pole "head of group" supply busbar (Cat. No. 4 052 00, 01, 02)

. Connection terminals (cat. No. 4 052 06)
. Cord transplanting (cat. No. 4 049 27)
. Sealable screwcover (cat. No. 4 063 04)

Signalling auxiliaries:

. Auxiliary contact (0.5 module, Cat. No. 4 062 58)
. Fault signalling contact (0.5 module, Cat. No. 4 062 60)
. Auxiliary contact that can be changed into fault signalling contact (0.5 module, Cat. No. 4 062 62)
. Auxiliary contact + fault signalling contact that can be changed into 2 auxiliary contacts (1 module, Cat. No. 4 062 66)

Control auxiliaries:

. Shunt trip (1 module, Cat. No. 4 062 76, 78)
. Under voltage release (1 module, Cat. No. 4 062 80, 82)
. Autonomous shunt trip release for N/C push-button (1.5 module, Cat. No. 4 062 87)
. Power Overvoltage Protection (1 module, Cat. No. 4 062 86)

Motor driven control modules:

. Motor-driven control module (1 module, Cat. No. 4 062 91)
. Motor-driven control module with integrated automatic reset (2 modules, Cat. Nos. 4 062 93, 4 062 95)

STOP&GO automatic resetting for DX³:

. STOP&GO automatic resetting (2 modules, Cat. No. 4 062 88)

Possible combinations of auxiliaries and MCBs:

. The auxiliaries are installed to the left of the MCBs
. Maximum number of auxiliaries = 3
. Maximum number of 1 module signalling auxiliaries = 2
. Maximum number of control auxiliaries (Cat. Nos. 4 062 76 to 4 062 87) = 1
. The control auxiliary (trip Cat. Nos. 4 062 76 to 4 062 87) must mandatorily be placed to the left of the signalling auxiliaries (Cat. Nos. 4 062 58 to 4 062 66) where the auxiliaries from these 2 families are connected to the same MCB.

Sealing:

. Possible in the open or closed positions

Locking options:

. Via padlock 5 mm in diameter (Cat. No. 4 063 13) or padlock 6 mm in diameter (Cat. No. 0 227 97) and padlock support (Cat. No. 4 063 03)

Installation software:

. XL PRO³