MURR ELEKTRONIK
stay connected

CUBE67 I/O EXTENSION MODULE

16 multifunction channels

Expansion module
DIO16 - 0.5 A (E) - 8× M12
short-circuit and overload protected
Digital inputs/outputs (multifunctional)
Connection cables are in the online shop under "Connection Technology".
Housing fully potted.

Link to Product

Illustration



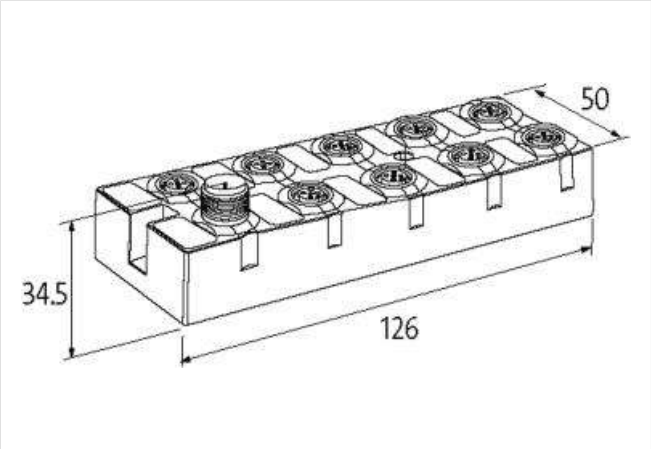

Product may differ from Image

Commercial data	
ECLASS-6.0	27242604
ECLASS-6.1	27242604
ECLASS-7.0	27242604
ECLASS-8.0	27242604
ECLASS-9.0	27242604
ECLASS-10.1	27242604
ECLASS-11.1	27242604
ECLASS-12.0	27242604
ETIM-5.0	EC001599
customs tariff number	85389099
GTIN	4048879048590
Packaging unit	1

Electrical data | Supply	
Norm operating voltage	EN 61131-2
Operating voltage US DC	24 V
Operating voltage UA DC	24 V
Current consumption max.	50 mA
Total current UA max.	4 A
Total current US max.	4 A

The information in this Product-PDF has been compiled with the utmost care.
Liability for the correctness completeness and topicality of the information is restricted to gross negligence. Version: 2024-01-31

MURR ELEKTRONIK
stay connected

Electrical data | Input	
Overload resistant	yes
Short-circuit protected	yes
Type input	PNP, for 3-wire sensors or mechanical switches
Input filter time	1 ms
Sensor current US per input max.	0,2 A
Electrical data | Output	
Overload resistant	yes
Short-circuit protected	yes
Output current per pin max.	0,5 A
Lamp load	10 W
Diagnostics	
Actuator warning	per channel via LED and BUS
Diagnostic	No voltage, Under voltage
Diagnostic via BUS	per module and channel
Diagnostic via LED	per module and channel
Short circuit diagnosis	yes
LED display	Ethernet connection/data traffic
Overload diagnosis	yes
Device protection | Electrical	
Degree of protection (EN IEC 60529)	IP67
Mechanical data | Mounting data	
Suitable for mounting type	2-hole screw mounting
Height	126 mm
Width	50 mm
Depth	34,5 mm
Environmental characteristics | Climatic	
Operating temperature min.	0 °C
Operating temperature max.	55 °C
Storage temperature min.	-20 °C
Storage temperature max.	75 °C
Connection type 3	
Connection type 1	0-7
Connection type 2	Bus In
Connection type 3	Bus Out
Family construction form	M12
Gender	female
Color contact carrier	black
Coding	A
No. of poles	5
PIN 1	24 V DC (US)
PIN 2	DI / DO / Diag 10-17
PIN 3	0 V
PIN 4	DI / DO 0-7
PIN 5	PE
Family construction form	M12
Gender	male
Color contact carrier	black
Coding	A
No. of poles	6
PIN 1	24 V DC (UA)
PIN 2	24 V DC (US)

The information in this Product-PDF has been compiled with the utmost care.
Liability for the correctness completeness and topicality of the information is restricted to gross negligence. Version: 2024-01-31

PIN 3	0 V
PIN 4	Bus internal
PIN 5	Bus internal
PIN 6	0 V
Family construction form	M12
Gender	female
Color contact carrier	black
Coding	A
No. of poles	6
PIN 1	24 V DC (UA)
PIN 2	24 V DC (US)
PIN 3	0 V
PIN 4	Bus internal
PIN 5	Bus internal
PIN 6	0 V

The information in this Product-PDF has been compiled with the utmost care.
Liability for the correctness completeness and topicality of the information is restricted to gross negligence. Version: 2024-01-31