Directional valves → Mechanically operated

5/2-way valve, Series ST

► Qn= 280 l/min ► pipe connection ► compressed air connection output: G 1/8 ► with spring return



00108065

Version	Spool valve not lockable
Sealing principle	metal/metal sealing
Working pressure min./max.	-0.95 bar / 10 bar
Ambient temperature min./max.	-15°C / +80°C
Medium temperature min./max.	-15°C / +80°C
Medium	Compressed air
Max. particle size	5 μm
Oil content of compressed air	5 mg/m³ - 25 mg/m³
Mounting screw	M4 with hexagon socket
mounting screw tightening torque	2.5 Nm
Materials:	
Housing	Stainless steel, hardened

Technical Remarks

- The pressure dew point must be at least 15 °C under ambient and medium temperature and may not exceed 3 °C.
- The oil content of air pressure must remain constant during the life cycle.
- Use only the approved oils from Bosch Rexroth, see chapter „Technical information“.
- Note: This product may only be operated with oiled compressed air.

	Actuating control	Compressed air connection			Qn	Actuating force Min.	Actuating torque Min.	Part No.
		Input	Output	Exhaust				
					[l/min]	[N]	[Nm]	
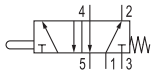	Plunger	G 1/8	G 1/8	G 1/8	280	11	-	0820403001
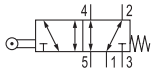	Roller	G 1/8	G 1/8	G 1/8	280	6.5	-	0820403002
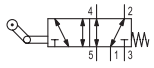	Roller lever, one-way trip	G 1/8	G 1/8	G 1/8	280	6.5	-	0820403003
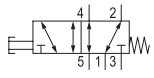	Push button	G 1/8	G 1/8	G 1/8	280	6.5	-	0820403004
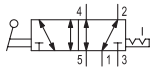	Lever	G 1/8	G 1/8	G 1/8	280	-	0.02	0820403005
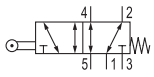	Roller with single-action lever	G 1/8	G 1/8	G 1/8	280	10	-	0820403016
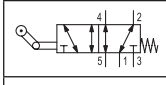	Roller with articulated lever	G 1/8	G 1/8	G 1/8	280	25	-	0820403017
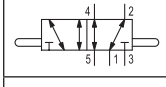	Plunger	G 1/8	G 1/8	G 1/8	280	5	-	0820403019
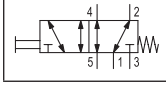	panel installation	G 1/8	G 1/8	G 1/8	280	11	-	R422002213

Part numbers marked in bold are available from the central warehouse in Germany, see the shopping basket for detailed information

Directional valves → Mechanically operated

5/2-way valve, Series ST

► Qn= 280 l/min ► pipe connection ► compressed air connection output: G 1/8 ► with spring return

Part No.	Material: Actuating control	Weight	Note
		[kg]	
0820403001	Stainless steel	0.22	Fig. 1
0820403002	Polyoxymethylene	0.23	Fig. 2
0820403003	Polyoxymethylene	0.23	Fig. 3
0820403004	Polyamide	0.23	Fig. 4
0820403005	Polyamide	0.22	Fig. 5
0820403016	Polyoxymethylene	0.34	Fig. 6
0820403017	Polyoxymethylene	0.34	Fig. 7
0820403019	Stainless steel	0.22	Fig. 8
R422002213	Polyoxymethylene	0.22	1); Fig. 9

1) Please order control button separately.
Nominal flow Qn at 6 bar and Δp = 1 bar

Dimensions, Fig. 1, Basic valve

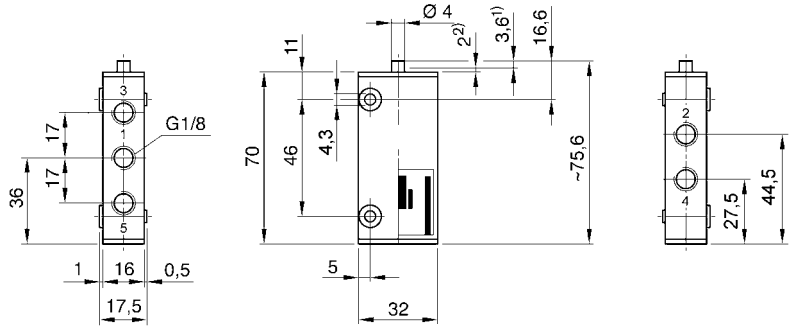

1) Actuating stroke 2) overstroke
connection via 2 through-holes in housing
Dimensions of basic valve apply to all types of actuation.

Dimensions, Fig. 2

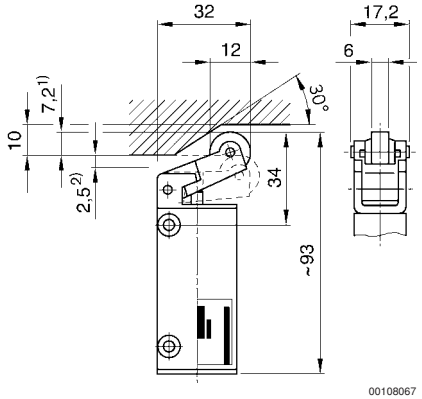

1) Actuating stroke 2) overstroke
connection via 2 through-holes in housing

Directional valves → Mechanically operated

5/2-way valve, Series ST

► Qn= 280 l/min ► pipe connection ► compressed air connection output: G 1/8 ► with spring return

Dimensions, Fig. 3

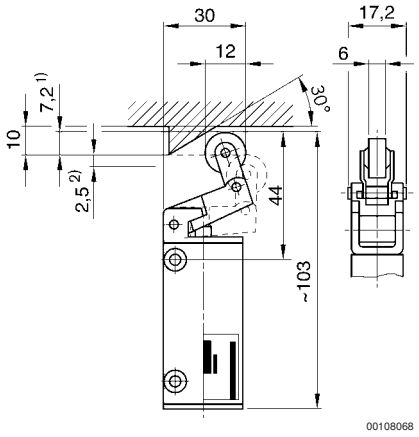

1) Actuating stroke 2) overstroke
connection via 2 through-holes in housing

Dimensions, Fig. 4

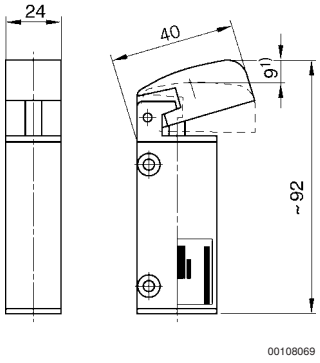

1) actuating stroke
Mounting via 2 through-holes in housing

Dimensions, Fig. 5

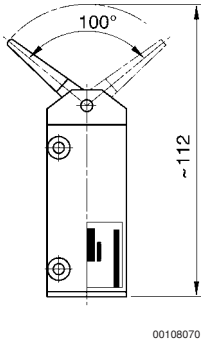

Mounting via 2 through-holes in housing

Directional valves → Mechanically operated

5/2-way valve, Series ST

► Qn= 280 l/min ► pipe connection ► compressed air connection output: G 1/8 ► with spring return

Dimensions, Fig. 6

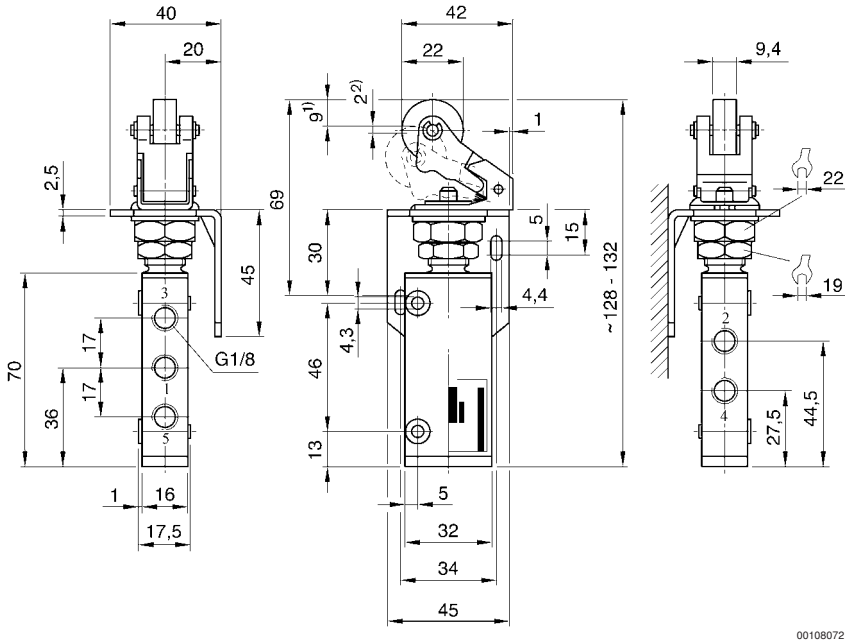

1) actuating stroke 2) overstroke
Can be adjusted by 90°, thereby providing 4 different angles of approach.

Dimensions, Fig. 7

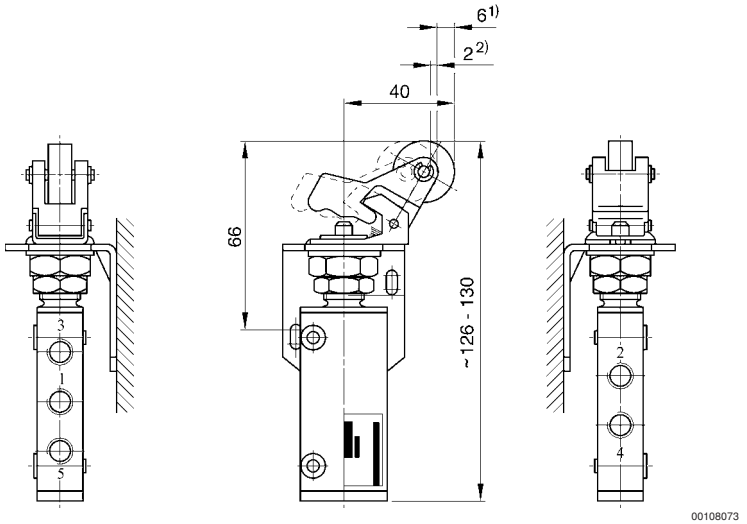

1) actuating stroke 2) overstroke
Can be adjusted by 90°, thereby providing 4 different angles of approach.

Directional valves → Mechanically operated

5/2-way valve, Series ST

► Qn= 280 l/min ► pipe connection ► compressed air connection output: G 1/8 ► with spring return

Dimensions, Fig. 8

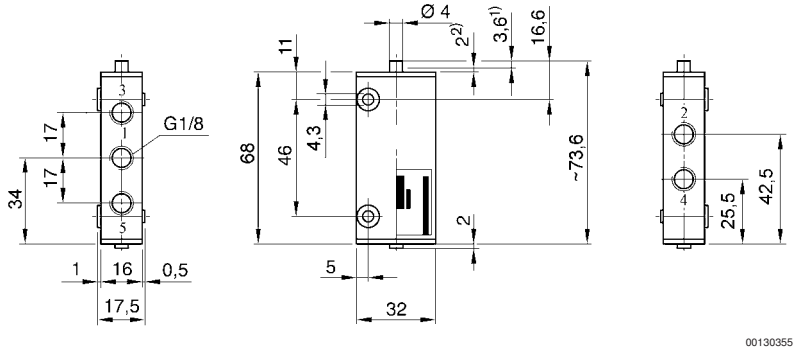

1) actuating stroke 2) overstroke

connection via 2 through-holes in housing. If the plunger is displaced all the way to the housing cover, the actuating stroke changes from 3.6 to 5.6 mm.

Directional valves → Mechanically operated

5/2-way valve, Series ST

► Qn= 280 l/min ► pipe connection ► compressed air connection output: G 1/8 ► with spring return

Dimensions, Fig. 9

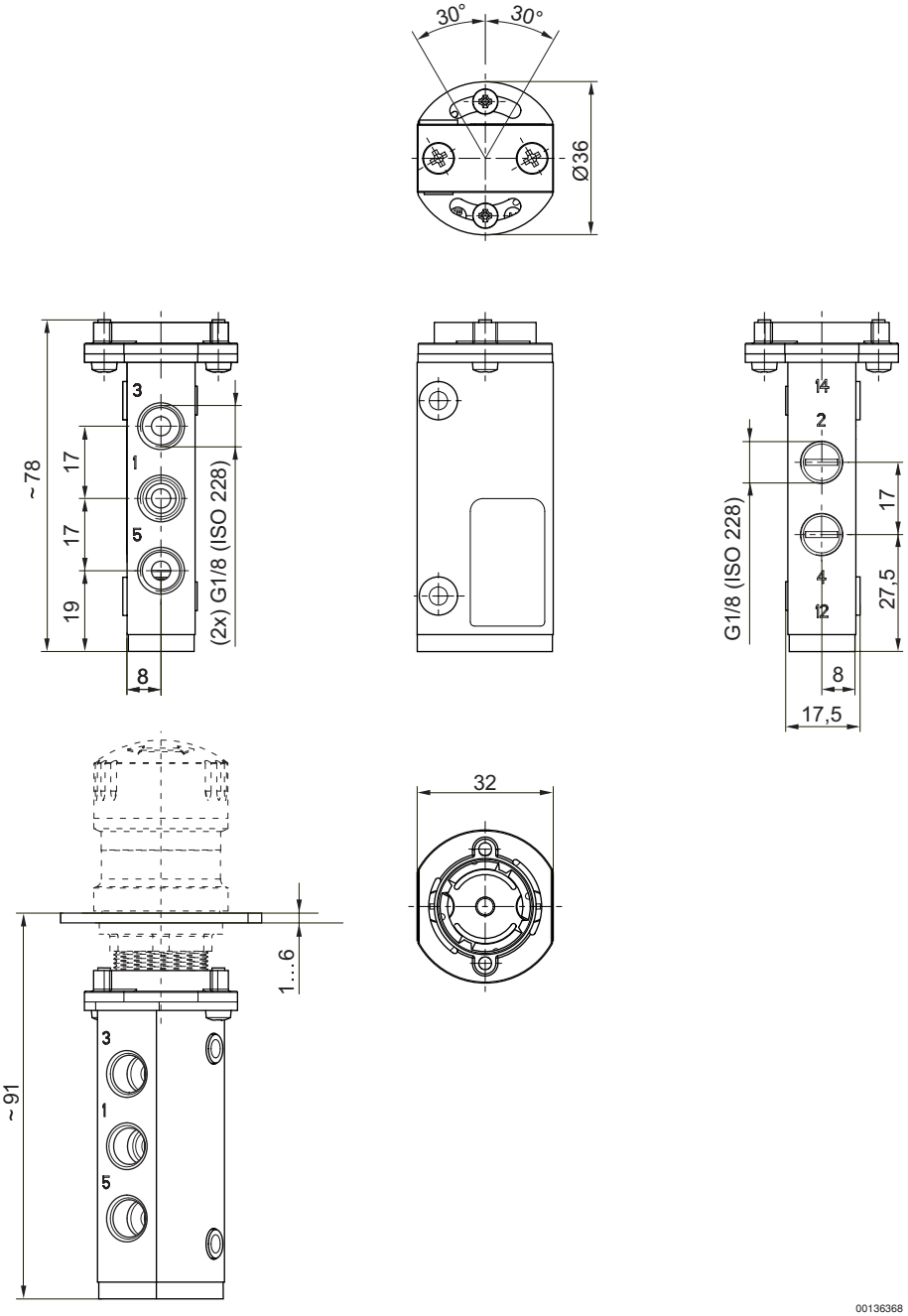

Directional valves → Mechanically operated

5/2-way valve, Series ST

► Qn= 280 l/min ► pipe connection ► compressed air connection output: G 1/8 ► with spring return

Dimensions, cut-out in the front plate

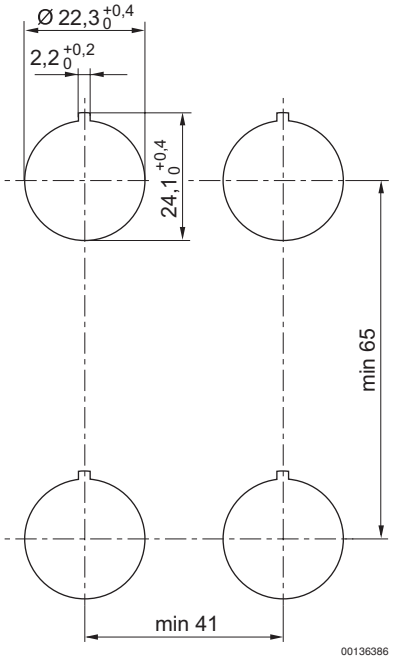

angle of approach for 0820403016 and 0820403017

