Product data sheet
Characteristics

XUYPS1LCO965S
photoelectric sensor - XUY - BGS - laser - Sn 300 mm - 12..24VDC - M8



Main

Range of product	OsiSense XU
Series name	Application, materials handling
Electronic sensor type	Photo-electric sensor
Sensor name	XUY
Sensor design	Compact
Detection system	Diffuse with background suppression
Material	Plastic
Type of output signal	Discrete
Supply circuit type	DC
Wiring technique	4-wire
Discrete output type	PNP and NPN
Discrete output function	1 NO or 1 NC programmable
Electrical connection	1 male connector M8, 4 pins
Product specific application	Control of level Monitoring of small parts on production machine Monitoring for crack on a component Suppression of a background Detection of components on a printed circuit
Emission	Red laser, pulsed, wavelength: 675 nm - class 2
[Sn] nominal sensing distance	50…300 mm

Complementary

Enclosure material	Glass impregnated nylon
Lens material	PMMA
Spot diameter	0 mm manual adjustment
Minimum object diameter for detection	0.5 mm
Output type	Solid state
Status LED	Output state: 1 LED (green) NC function: 1 LED (none) NO function: 1 LED (red) Time delay active: 1 LED (red)
[Us] rated supply voltage	12...24 V DC with reverse polarity protection
Supply voltage limits	10…30 V DC
Switching capacity in mA	100 mA (overload and short-circuit protection)
Switching frequency	> 5 kHz
Maximum voltage drop	<2 V (closed state)
Current consumption	35 mA
Maximum delay response	40 ms for output circuit depending on wiring
Maximum delay recovery	150 µs
Setting-up	Manual adjustment of focusing
Net weight	0.081 kg

The information provided in this documentation contains general descriptions and/or technical characteristics of the performance of the products contained herein.
This documentation is not intended as a substitute for and is not to be used for determining suitability or reliability of these products for specific user applications.
It is the duty of any such user or integrator to perform the appropriate and complete risk analysis, evaluation and testing of the products with respect to the relevant specific application or use thereof.
Neither Schneider Electric Industries SAS nor any of its affiliates or subsidiaries shall be responsible or liable for misuse of the information contained herein.

Environment

Product certifications	CULus CE
Ambient air temperature for operation	0…50 °C
Ambient air temperature for storage	-20…60 °C
Immunity to ambient light	10000 Lux natural light 500 lux incandescent bulb
IP degree of protection	IP65 conforming to IEC 60529

Offer Sustainability

Sustainable offer status	Green Premium product
EU RoHS Directive	Pro-active compliance (Product out of EU RoHS legal scope) EU RoHS Declaration
Mercury free	Yes
RoHS exemption information	Yes
Environmental Disclosure	Product Environmental Profile
Circularity Profile	End Of Life Information

Contractual warranty

Warranty	18 months

Dimensions

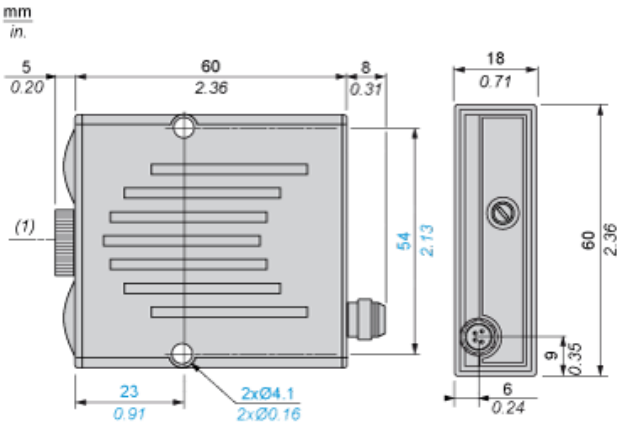

(1) Optical axis of laser

Wiring Schemes

M8 Connector

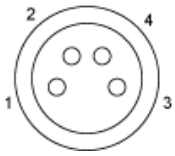

1 : Brown
2 : White
3 : Blue
4 : Black

NO Function

Without time delay

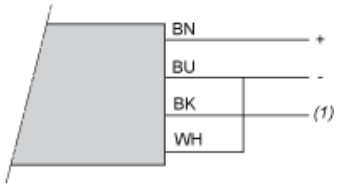

With 40 ms time delay

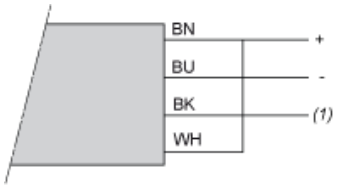

BN : Brown
WH : White
BU : Blue
BK : Black
(1) Output

NC Function

Without time delay

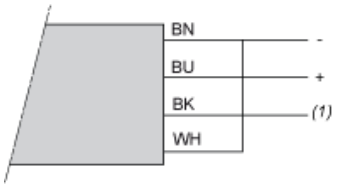

With 40 ms time delay

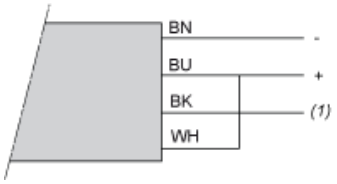

BN : Brown
WH : White
BU : Blue
BK : Black
(1) Output