Product datasheet
Characteristics

XCKM121
limit switch XCKM - thermoplastic roller lever plunger - 1NC+1NO - snap - Pg11

Price* : 37.42 GBP



Main

Range of product	OsiSense XC
Series name	Standard format
Product or component type	Limit switch
Device short name	XCKM
Body type	Fixed
Head type	Plunger head
Material	Metal
Body material	Zamak
Fixing mode	By the body
Movement of operating head	Linear
Type of operator	Spring return roller lever plunger thermoplastic
Type of approach	Lateral approach 1 direction
Cable entry	3 entries tapped for Pg 11 cable gland
Number of poles	2
Contacts type and composition	1 NC + 1 NO
Contact operation	Snap action

Complementary

Switch actuation	By 30° cam
Electrical connection	Screw-clamp terminals, clamping capacity: 1 x 0.34...2 x 1.5 mm²
Contacts insulation form	Zb
Number of steps	1
Positive opening	With
Positive opening minimum force	24 N
Minimum force for tripping	8 N
Minimum actuation speed	0.01 m/min

Disclaimer: This documentation is not intended as a substitute for and is not to be used for determining suitability or reliability of these products for specific user applications

Maximum actuation speed	1.5 m/s
Contact code designation	A300, AC-15 (Ue = 240 V, Ie = 3 A) conforming to EN/IEC 60947-5-1 appendix A Q300, DC-13 (Ue = 250 V, Ie = 0.27 A) conforming to EN/IEC 60947-5-1 appendix A
[Ithe] conventional enclosed thermal current	10 A AC
[Ui] rated insulation voltage	300 V conforming to CSA C22.2 No 14 500 V degree of pollution 3 conforming to IEC 60947-1 300 V conforming to UL 508
Resistance across terminals	<= 25 MOhm conforming to IEC 60255-7 category 3
[Uimp] rated impulse withstand voltage	6 kV conforming to IEC 60664 6 kV conforming to IEC 60947-1
Short-circuit protection	10 A by gG cartridge fuse
Electrical durability	5000000 cycles, DC-13, inductive load type, 120 V, 4 W, operating rate: <= 60 cyc/mn, load factor: 0.5 conforming to IEC 60947-5-1 appendix C 5000000 cycles, DC-13, inductive load type, 24 V, 7 W, operating rate: <= 60 cyc/mn, load factor: 0.5 conforming to IEC 60947-5-1 appendix C 5000000 cycles, DC-13, inductive load type, 48 V, 10 W, operating rate: <= 60 cyc/mn, load factor: 0.5 conforming to IEC 60947-5-1 appendix C
Mechanical durability	20000000 cycles
Width	64 mm
Height	64 mm
Depth	30 mm
Product weight	0.3 kg
Terminals description ISO n°1	(13-14)NO (21-22)NC

Environment

Shock resistance	50 gn (duration = 11 ms) conforming to EN/IEC 60068-2-27
Vibration resistance	25 gn (f = 10...500 Hz) conforming to EN/IEC 60068-2-6
IP degree of protection	IP66 conforming to EN/IEC 60529
IK degree of protection	IK05 conforming to EN 50102
Electrical shock protection class	Class I conforming to IEC 61140 Class I conforming to NF C 20-030
Ambient air temperature for operation	-25...70 °C
Ambient air temperature for storage	-40...70 °C
Protective treatment	TC
Product certifications	CCC CSA UL
Standards	EN 60204-1 EN 60947-5-1 IEC 60204-1 IEC 60947-5-1 UL 508 CSA C22.2 No 14

Offer Sustainability

Sustainable offer status	Green Premium product
RoHS (date code: YYWW)	Compliant - since 1012 - Schneider Electric declaration of conformity Schneider Electric declaration of conformity
REACh	Reference not containing SVHC above the threshold Reference not containing SVHC above the threshold
Product end of life instructions	Need no specific recycling operations

Contractual warranty

Warranty period	18 months

Dimensions

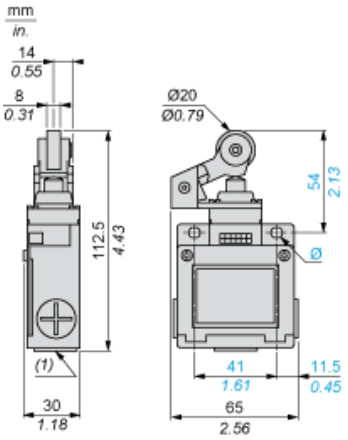

(1) 3 tapped entries Pg 11 cable gland
Ø : 2 elongated holes Ø 5.2 x 6.2

Mounting with Cable Entry

Position of Cable Gland

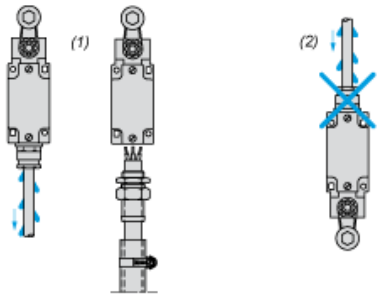

(1) Recommended
(2) To be avoided

Wiring Diagram

2-pole NC + NO Snap Action



Characteristics of Actuation

Switch Actuation by 30° Cam

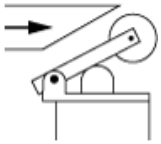

Functionnal Diagram

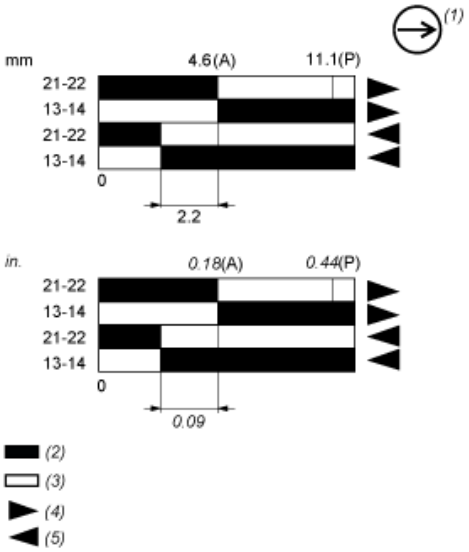

(P) Positive opening point
(A) Cam displacement
(1) NC contact with positive opening operation
(2) Closed
(3) Open
(4) Tripping
(5) Resetting