Inductive sensor

BES Q40KFU-PAC20A-S04G
BES0216

BALLUFF
sensors worldwide

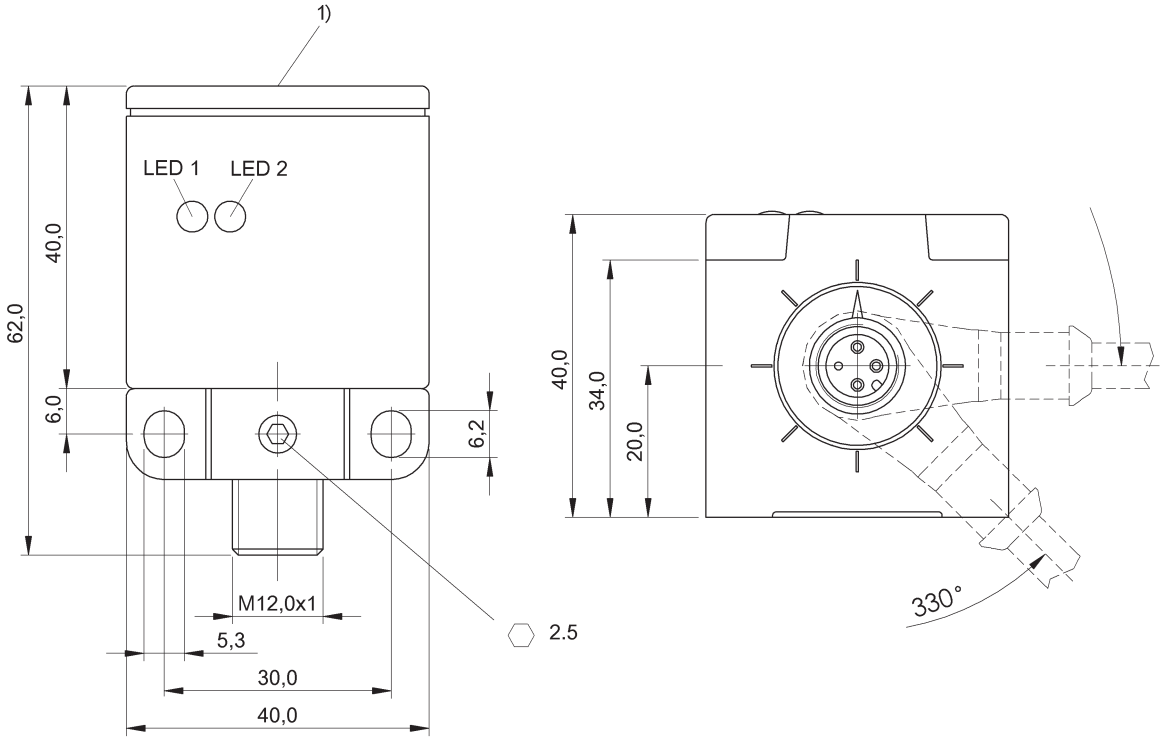

1) Active surface

- **PNP**
- **NO/NC**
- **20.00 mm**
- **Flush (shielded)**
- **Connector, M12x1-S04**

General attributes

Approvals / Conformity	cULus CE EAC
Basic standard	IEC 60947-5-2
Enclosure Type per IEC 60529	IP67
Function indicator	Yes
Magnetic field immune	immune to magnetic DC and AC fields
Operating distance marking	■■
Polarity reversal protected	Yes
Power indicator	Yes
Protection Class	II
Short circuit protected	Yes
Trademark	Factor 1
MTTF	520 a

Electrical attributes

Connection type	Connector
Eff. operating current Ie	200 mA
Eff. operating voltage Ue DC	24.0 V
Electrical version	DC, direct current
Load capacitance max. (at Ue)	1.000 µF
Magnetic field strength	100 kA/m
Max. no-load cur. Io undamped	15.0 mA
Minimum operating current Im	0 mA
No-load current Io damped max.	20.0 mA
Operating voltage UB max. DC [V]	30.0 V
Operating voltage UB min. DC [V]	10.0 V
Rated insulation voltage Ui	250 VAC
Rated short circuit current	100 A
Ripple max. (% of Ue)	15 %
Switching freq. f max. (at Ue)	400 Hz
Switching function	NO/NC
Switching output	PNP
Voltage drop static max.	2.5 V

Mechanical attributes

Ambient temperature Ta max.	70 °C
Ambient temperature Ta min.	-25 °C
Assured operating distance Sa	16.00 mm
Connector type	M12x1-S04
Depth	62.0 mm
Eff. operating distance Sr	20.00 mm
Height (small side)	40.0 mm
Housing material	PBT
Mech. installation condition	Flush (shielded)
Rated operating distance Sn [mm]	20.00 mm
Sensing face material	PBT

Remarks

The sensor is functional again after the overload has been eliminated.
LED 1: Function; LED 2: Operating voltage
Switching distance specifications and tolerance apply to the shown location of the active surface.

For further information on MTTF/B10d, please refer to the MTTF / B10d Certificate.

Specification of the MTTF value and the B10d value do not represent any binding quality and/or life expectancy guarantees.

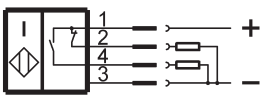
1
2
4
3
+
–

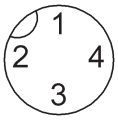
1
2
4
3