Product datasheet

Specifications



inductive sensor XS6 M30 - L62mm - brass - Sn15mm - 12..48VDC - cable 5m

XS630B1PBL5

Main

Range of product	Telemecanique Inductive proximity sensors XS
Series name	General purpose
Sensor type	Inductive proximity sensor
Device application	Mobile equipment
Sensor name	XS6
Sensor design	Cylindrical M30
Size	62 mm
Body type	Fixed
Detector flush mounting acceptance	Flush mountable
Material	Metal
Type of output signal	Discrete
Wiring technique	3-wire
[Sn] nominal sensing distance	15 mm
Discrete output function	1 NC
Output circuit type	DC
Discrete output type	PNP
Electrical connection	Cable
Cable length	5 m
[Us] rated supply voltage	12...48 V DC with reverse polarity protection
Switching capacity in mA	<= 200 mA DC with overload and short-circuit protection
IP degree of protection	IP68 double insulation conforming to IEC 60529 IP69K conforming to DIN 40050

Complementary

Thread type	M30 x 1.5
Detection face	Frontal
Front material	PPS
Enclosure material	Nickel plated brass
Sensing range	> 8...15 mm

Disclaimer: This documentation is not intended as a substitute for and is not to be used for determining suitability or reliability of these products for specific user applications

Operating zone	0…12 mm
Differential travel	1...15% of Sr
Cable composition	3 x 0.34 mm²
Wire insulation material	PvR
Status LED	Output state: 1 LED (yellow)
Supply voltage limits	10…58 V DC
Switching frequency	<= 500 Hz
Maximum voltage drop	<2 V (closed)
Current consumption	<= 10 mA no-load
Maximum delay first up	10 ms
Maximum delay response	0.6 ms
Maximum delay recovery	1.4 ms
Marking	CE
Threaded length	52 mm
Length	62 mm
Net weight	0.33 kg

Environment

Product certifications	E2 UL CSA
Ambient air temperature for operation	-25…70 °C
Ambient air temperature for storage	-40…85 °C
Vibration resistance	25 gn amplitude = +/- 2 mm (f = 10…55 Hz) conforming to IEC 60068-2-6
Shock resistance	50 gn for 11 ms conforming to IEC 60068-2-27

Packing Units

Unit Type of Package 1	PCE
Number of Units in Package 1	1
Package 1 Weight	270.0 g
Package 1 Height	4.4 cm
Package 1 width	10.8 cm
Package 1 Length	14.8 cm
Unit Type of Package 2	S02
Number of Units in Package 2	14
Package 2 Weight	4.097 kg
Package 2 Height	15 cm
Package 2 width	30 cm
Package 2 Length	40 cm
Package 3 Height	15 cm

Offer Sustainability

Sustainable offer status	Green Premium product

REACh Regulation	REACh Declaration
EU RoHS Directive	Pro-active compliance (Product out of EU RoHS legal scope) EU RoHS Declaration
Mercury free	Yes
RoHS exemption information	Yes
Environmental Disclosure	Product Environmental Profile
Circularity Profile	End of Life Information

Contractual warranty

Warranty	18 months

Product datasheet XS630B1PBL5

Dimensions Drawings

Dimensions

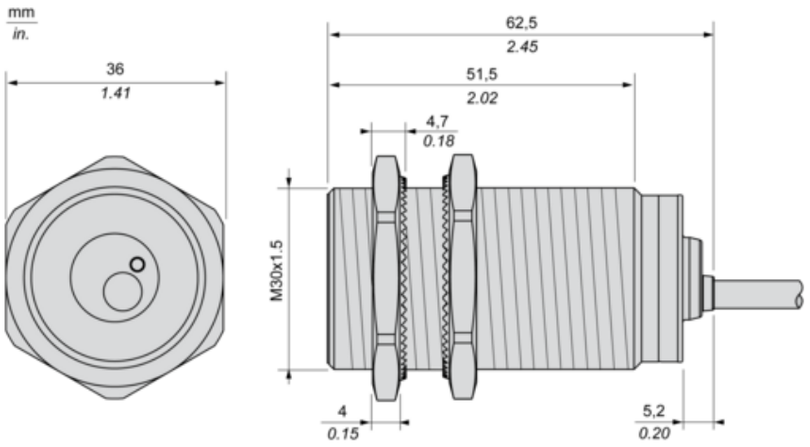

Product datasheet XS630B1PBL5

Mounting and Clearance

Minimum Mounting Distances

Side by side

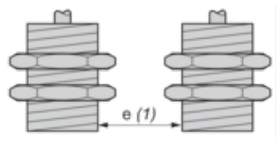

e (1) ≥ 30 mm/1.18 in.

Face to face

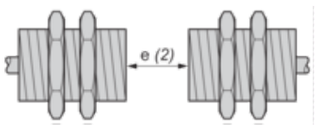

e (2) ≥ 180 mm/7.09 in.

Facing a metal object

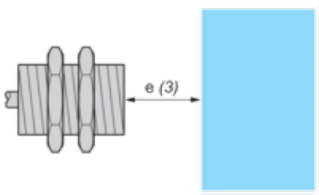

e (3) ≥ 45 mm/1.77 in.

Product datasheet XS630B1PBL5

Connections and Schema

Wiring Schemes

PNP

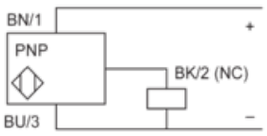

BU : Blue

BN : Brown

BK : Black