SCHMERSAL

EN Operating instructions. . . . . .pages 1 to 12
Original

4 Electrical connection
4.1 Wiring example SLB440 9
4.2 Wiring example SLB440-H 9
4.3 Connector configuration Receiver, Emitter & Cable 10
4.3.1 SLB440 10
4.3.2 SLB440-H 10

5 Set-up and maintenance
5.1 Check before start-up 10
5.2 Maintenance 10
5.3 Regular check 10
5.4 Half-yearly inspection 11
5.5 Cleaning 11

6 Diagnostic
6.1 Indication of configuration when system starts 11
6.2 Status display 11
6.3 Fault indication 11

7 Disassembly and disposal
7.1 Disassembly 11
7.2 Disposal. 11

8 Appendix
8.1 Contact 11

9 EU Declaration of conformity

Content

1 About this document
1.1 Function. 1
1.2 Target group: authorised qualified personnel 1
1.3 Explanation of the symbols used. 1
1.4 Appropriate use. 2
1.5 General safety instructions 2
1.6 Warning about misuse. 2
1.7 Exclusion of liability 2

2 Product description
2.1 Destination and use. 2
2.2 Ordering code 2
2.3 Special versions 2
2.4 Included in delivery 2
2.5 Technical data 3
2.6 Weight 3
2.7 Safety classification. 3
2.8 Modes of operation / functions 3
2.8.1 Protection mode with automatic operation (automatic) 3
2.8.2 Protection mode with restart interlock 4
2.8.3 Parameter setting 4
2.8.4 Self-test 4

3 Mounting
3.1 General conditions 5
3.2 Protection field and approach 5
3.3 Aligning the sensors 5
3.4 Setting mode 5
3.5 Safety distance 6
3.5.1 Minimum distance to reflecting surfaces 6
3.6 Interference / Beam coding 7
3.7 Dimensions 7
3.8 Mounting material (Not included in delivery!) 8

1. About this document

1.1 Function

This operating instructions manual provides all the information you need for the mounting, set-up and commissioning to ensure the safe operation and disassembly of the safety device. The operating instructions must be available in a legible and complete version in the vicinity of the device.

1.2 Target group: authorised qualified personnel

All operations described in this operating instructions manual must be carried out by trained specialist personnel, authorised by the plant operator only.

Please make sure that you have read and understood these operating instructions and that you know all applicable legislations regarding occupational safety and accident prevention prior to installation and putting the component into operation.

The machine builder must carefully select the harmonised standards to be complied with as well as other technical specifications for the selection, mounting and integration of the components.

1.3 Explanation of the symbols used

Information, hint, note:
This symbol is used for identifying useful additional information.

Caution: Failure to comply with this warning notice could lead to failures or malfunctions.
Warning: Failure to comply with this warning notice could lead to physical injury and/or damage to the machine.

x.000 / 07.2022 / v.A. - 103015423-EN / B / 2022-07-19 / AE-Nr. 15051

1.4 Appropriate use

The Schmersal range of products is not intended for private consumers.

The products described in these operating instructions are developed to execute safety-related functions as part of an entire plant or machine. It is the responsibility of the manufacturer of a machine or plant to ensure the correct functionality of the entire machine or plant.

The safety device must be exclusively used in accordance with the following information or for the applications authorised by the manufacturer. Detailed information regarding the range of applications can be found in the chapter "Product description".

1.5 General safety instructions

The user must observe the safety instructions in this operating instructions manual, the country-specific installation standards as well as all prevailing safety regulations and accident prevention rules.

Further technical information can be found in the Schmersal catalogues or in the online catalogue on the Internet: products.schmersal.com.

The information contained in this operating instructions manual is provided without liability and is subject to technical modifications.

There are no residual risks, provided that the safety instructions as well as the instructions regarding mounting, commissioning, operation and maintenance are observed.

Additional measures could be required to ensure that the system does not present a dangerous breakdown, when other forms of light beams are present in a special application (e.g. use of wireless control devices on cranes, radiation of welding sparks or effects of stroboscopic lights).

1.6 Warning about misuse

In case of improper use or manipulation of the safety switchgear, personal hazards or damages to machinery or plant components cannot be excluded when safety switchgear is used.

Only if the information described in this operating instructions manual are realised correctly, the safety function and therefore the compliance with the Machinery Directive is maintained.

1.7 Exclusion of liability

We shall accept no liability for damages or malfunctions resulting from defective mounting or failure to comply with this operating instructions manual. The manufacturer shall accept no liability for damages resulting from the use of unauthorised spare parts or accessories.

For safety reasons, invasive work on the device as well as arbitrary repairs, conversions and modifications to the device are strictly forbidden; the manufacturer shall accept no liability for damages resulting from such invasive work, arbitrary repairs, conversions and/or modifications to the device.

The entire concept of the control system, in which the safety component is integrated, must be validated to the relevant standards.

2. Product description

2.1 Destination and use

The SLB is a non-contact, self-testing safety active optical protective device (AOPD), which is used for the protection of hazardous points, hazardous areas and machine access. If one or more light beams are interrupted, the hazardous movement must be stopped.

The user must evaluate and design the safety chain in accordance with the relevant standards and the required safety level.

2.2 Ordering code

This operating instructions manual applies to the following types:

SLB440-ER-①-②-③-④

No.	Option	Description
①	1	Beam coding 1
	2	Beam coding 2
	3	Beam coding 3
	4	Beam coding 4
②	ST	Termination male connector
	LST	Cable with connector
③	H	Alternative range [1]
④	EH	Electric heater [2]

[1] Range without H: 0.3 … 15.0 m
Range with H: (factory setting) 0.3 … 18.0 m
(Alternative range) 12.0 … 75.0 m

[2] Electrical heating (EH) is only possible with SLB440-H.

2.3 Special versions

For special versions, which are not listed in the order code, these specifications apply accordingly, provided that they correspond to the standard version.

2.4 Included in delivery

- Emitter, receiver
- Operating instructions DE/EN

2.5 Technical data

Standards:	EN 61496-1, EN 61496-2, EN ISO 13849-1, EN 62061
Material of the enclosure:	Aluminium
Detection ability for test bodies:	
- SLB440:	10 mm static [1]
- SLB440-H:	10 mm static [1]
Alternative range:	70 mm static [1]
SLB range:	
- SLB440:	0.3 … 15.0 m
- SLB440-H:	0.3 … 18.0 m
Alternative range:	12 … 75 m
Reaction time/Response time:	
- Beam coding 1:	10 ms
- Beam coding 2:	14 ms
- Beam coding 3:	18 ms
- Beam coding 4:	22 ms
- Beam coding 5:	7 ms
Rated operating voltage:	
- SLB440/440-H:	24VDC ± 10%, 1 A
- SLB440-H-EH:	24VDC +10%, controllable output voltage, 4 A PELV mains unit in accordance with EN 60204 (power failure bypass 20 ms)
Rated operating current:	
- SLB440/440-H:	100 mA + 2x 200 mA each OSSD
- SLB440-H-EH:	3 A + 2x 200 mA each OSSD
Wavelength of the infrared radiation:	880 nm
Emitter, infrared emitted radiation	
- to EN 12198-1:	Category 0
- to EN 62471:	free group
Safety outputs	
OSSD1, OSSD2:	2 x short-circuit proof PNP semi-conductor outputs
Test impulse cycle OSSD:	600 ms
Test impulse length:	max. 200 µs
Switching voltage HIGH [2]:	>15 V
Switching voltage LOW [2]:	<2 V
Switching current each OSSD:	200 mA
Leakage current [3]:	<1 mA
Load capacity:	max. 200 nF
Load inductance [4]:	max. 2 H
Inputs:	restart 100 ms to 1500 ms monitored
Function:	Protective mode / Automatic, Restart Interlock (manual reset), Setting mode
Status indication receiver:	End cap with integrated status indication
Connection:	
- Emitter:	connector M12, 4-pole
- Receiver:	connector M12, 5-pole
Ambient temperature:	−30° C … + 50° C
Storage temperature:	−30° C … + 70° C
Degree of protection:	IP67 (EN 60529)
Resistance to vibration:	10 … 55 Hz to EN 60068-2-6
Resistance to shock:	10 g, 16 ms, to EN 60028-2-29
Year of construction:	as of 2016 version 1.0

[1] Detection sensitivity reduced with moving test body.
Further information available from technical sales department.
[2] To EN 61131-2
[3] In case of failure, the leakage current flows to the OSSD cable.
The downstream control element must recognise this state as LOW.
A safety PLC must detect this state.
[4] The load inductivity generates an induced voltage during the switch-off, which compromises the downstream components (spark quenching element).

2.6 Weight

Weight [kg]					
SLB440-ST	SLB440-LST	SLB440-ST-H	SLB440-LST-H	SLB440-ST-H-EH	SLB440-LST-H-EH
0.14	0.15	0.2	0.24	0.24	0.28

2.7 Safety classification

Standards:	EN ISO 13849-1, EN 62061
PL:	up to e
Control category:	up to 4
PFH:	1.5 x 10^{-8} 1/h
SIL:	up to 3
Mission time:	20 years

2.8 Modes of operation / functions

All of the described functions can be executed without safety monitoring modules. A command unit is needed for diagnosis and function selection (button, adapter cable, see section on parameterisation).

The system has the following operating modes:
- Protection mode with automatic start after clearance of the protection field (factory setting)
- Protection mode with restart interlock

The system has the following functions:
- Parameter setting with selection of beam coding and type of protection mode. On SLB440-H-EH, the integrated heater can be activated and deactivated.
- Alignment aid, diagnosis
- Heater with temperature control (only SLB440-H-EH)

Factory setting

When delivered (factory setting) automatic mode is active.
On SLB440-H-EH with integrated heater, the heater/temperature control is active in delivered state.

2.8.1 Protection mode with automatic operation (automatic)

In automatic mode the safety switching outputs (OSSD) are switched to the ON state if the protection zone is uninterrupted. This is done without use of a command device.

This operating mode initiates an automatic restart of the machine if the protection zone is not interrupted.



This operating mode may only be chosen in conjunction with the restart interlock (manual reset) of the machine. This operating mode must not be chosen, when persons can step behind the protection field.

Display

Diagnostic lamp	Status
Red	OFF state (protection zone interrupted, OSSD signal low)
Green	ON state (protection zone uninterrupted, OSSD signal high)

2.8.2 Protection mode with restart interlock

In the operating mode restart interlock, the safety switching outputs (OSSD) remain in the OFF state after the power supply is applied or after the protection zone has been interrupted.

The AOPD switches the OSSDs to the ON state only if at the reset input a signal impulse is applied with a duration of 100 ms < T < 1500 ms using a command device (pushbutton).
The receiver indicates the restart interlock state by a yellow signal on the signal end cap. If the protection zone is interrupted, the signal lamp remains red.

The AOPD changes to alignment aid mode if the reset pushbutton is pressed for at least 2 seconds when the operating voltage is applied, see chapter Setting mode.

The command device (reset pushbutton) must be installed outside of the hazardous zone. The hazardous zone must be easily visible to the user.

Display

Diagnostic lamp	Status
Red	OFF state (protection zone interrupted, OSSD signal low)
Green	ON state (OSSD signal high)
Yellow	Restart interlock is active, SLB waiting for reset signal

2.8.3 Parameter setting

In parameterisation mode, individual adaptation of the operating parameters for emitter and receiver can be carried out.

Possible options are:

No.	Option	Description
P1	active / not active	Beam coding 1 (response time 10 ms)
P2	active / not active	Beam coding 2 (response time 14 ms)
P3	active / not active	Beam coding 3 (response time 18 ms)
P4	active / not active	Beam coding 4 (response time 22 ms)
P5	active / not active	Beam coding 5 (response time 7 ms)
P6	active / not active	active = restart interlock not active= automatic mode
P7	active / not active	Heater regulation: Only on SLB440-H-EH with integrated heater

The beam coding 5 may only be used if no other SLBs are operated in parallel.

The response time of the system changes with the selected beam coding. The safety distance must be adapted accordingly. See section on reaction time.

Parameter setting with adapter cable KA-0977

- Switch the supply voltage off.
- Connect adapter cable KA-0977 to the device.
- Press and hold the integrated pushbutton and switch the supply voltage on. The button can be released as soon as the indicator of the receiver changes from red to yellow and the indicator of the emitter changes from blue to yellow.
- The AOPD is now in setting mode. The signal strength is displayed on the receiver through impulses or steady illumination of the yellow LEDs.
- To enter parameterisation, the pushbutton must be pressed briefly (100 ms < T < 1500 ms).
- The status of parameter P1 is now indicated. The signal lamp lights up once in cyan here (parameter is active) or magenta (parameter is not active).
- Press the pushbutton briefly to change to the next parameter. The number of light impulses indicates the parameter number, the colour indicates the parameter status (cyan = active, magenta = not active).
- Press and hold the pushbutton (2.5 s < T < 6 s) and the status of the current parameter changes from ACTIVE to NOT ACTIVE or from NOT ACTIVE to ACTIVE and is saved. While the button is pressed, the indicator changes after 1.5 s to the colour of the current status. Pressing and holding the button longer T > 2.5 s indicates the colour of the new status. The button can now be released to save. If the button is pressed and held for longer than 6 s, the indicator goes out and the change is not accepted.
- To exit parameterisation mode, switch the supply voltage off and restore the original wiring.

Emitter and receivers can be configured simultaneously with adapter cable KA-0977.

Parameter P6 restart interlock only acts on the receiver.

Parameter setting without adapter cable KA-0977

As an alternative to the adapter cable, a pushbutton can be connected as follows:

Wiring configuration Emitter

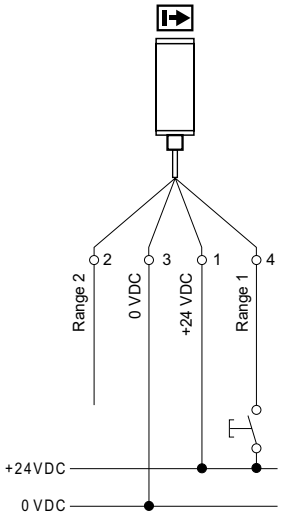

Wiring configuration Receiver

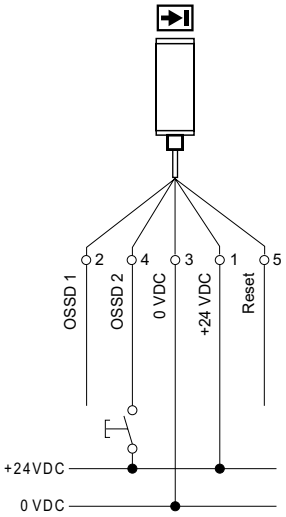

2.8.4 Self-test

The AOPD carries out a self-test within 2 seconds after the power supply is applied. In the event of a fault, the AOPD is locked in the OFF state and reports the status (see section on fault diagnosis).

After a successful self-test the AOPD switches to the ON state if the protection zone is clear (automatic operating mode).

During operation, the system executes a cyclic self-test. Safety-relevant faults are detected within the reaction time and cause the outputs to be put in the OFF state and an error code is issued.

3. Mounting

3.1 General conditions

The following guidelines are provided as preventive warning notices to ensure a safe and appropriate handling. These guidelines are an essential part of the safety instructions and therefore must always be observed and respected.

- The AOPD must not be used on machines which cannot be stopped electrically in case of emergency.
- The safety distance between the AOPD and a hazardous machine movement must always be observed and respected.
- Additional mechanical safety guards must be installed so that the operator has to pass by the protection field to reach the hazardous machine parts.
- The AOPD must be installed so that the personnel is always within the detection zone when operating the machine. An incorrect installation can lead to serious injuries.
- Never connect the outputs to +24VDC. If the outputs are wired to +24VDC, they are in ON state, as a result of which they are unable to stop a hazardous situation occurring on the application/machine.
- The safety inspections must be conducted regularly.
- The AOPD must not be exposed to inflammable or explosive gasses.
- The connecting cables must be connected in accordance with the installation instructions.
- The fixing screws of the mounting brackets must be firmly tightened.

3.2 Protection field and approach

Additional protective devices must ensure that the operator has to pass by the protection field to reach the hazardous machine parts.
The AOPD must be installed so that personnel are always located within the detection zone of the safety device when operating the hazardous machine parts to be secure.

3.3 Aligning the sensors

Procedure:

1. Emitter and receiver must be fitted parallel to each other and at the same height.
2. First turn the emitter and then the receiver so that the front covers are opposite each other until the integrated signal lamp lights up green (operating mode automatic) or yellow (operating mode restart interlock).
3. Adjust the emitter and receiver so that they are in the middle of the angular range for a green or yellow indication. Fix the position with the two screws on the mounting bracket.

3.4 Setting mode

In this operating mode, the signal strength is indicated by yellow light impulses. The better the alignment, the higher the frequency of the light pulses. The alignment is optimal when the light pulses switch over to continuous light.
If there is no optical synchronisation between the emitter and the receiver, a light pulse is emitted every three seconds.

Setup mode is terminated by switching off the supply voltage.

Activating setting mode with 5-pole cable connection

If +24V is applied for at least 2 seconds when the system starts, on the reset input (e.g. by pressing the pushbutton), the receiver unit starts in setting mode. The pushbutton can be released as soon as the indicator changes from red to yellow.

Activating setting mode with 4-pole cable connection

If +24V is applied for at least 2 seconds when the system starts, on the "OSSD 1" output, the receiver unit starts in setting mode.

If setting mode is activated with 24V at OSSD 1, the outputs OSSD 1 and OSSD 2 must not be connected to the machine or the machine controls.

Activating setting mode with adapter cable KA-0977

Connect the adapter cable to the device. Press and hold the integrated pushbutton and switch the supply voltage on. The button can be released as soon as the indicator changes from red to yellow.

Integrated alignment aid (only SLB440-H)

The receiver part has an integrated LED behind the front cover which acts as an alignment aid by making the optical detection range of the receiver visible. The light impulses of the alignment aid are only visible if the person viewing them is within the detection range. The emitter should be mounted in a position at which the integrated alignment aid is clearly visible.

As soon as the receiver unit detects a signal from the emitter, the number of output light impulses changes:

2 impulses	No reception
3 impulses	Weak reception
4 impulses	Adequate reception
5 impulses	Optimum reception

Adjusting the emitter range (only SLB440-H)

Operation can be configured for two different ranges by changing the wiring at the emitter.

Range
0.3 m up to 18 m

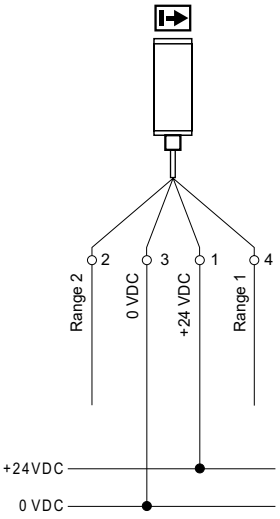

Range
12 m up to 75 m

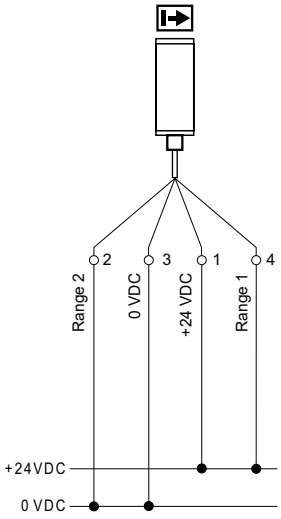

If systems are configured to high range but with smaller operating distance (<12 m), the user is exposed to a risk of reflection.

When the system starts, the integrated signal lamp first indicates the set beam coding by way of the corresponding number of light impulses.
If another impulse follows after a two second break, the emitter is configured to high range.

3.5 Safety distance

The safety distance is the minimum distance between the protection field of the safety light barrier and the hazardous area. The safety distance must be observed to ensure that the hazardous area cannot be reached before the hazardous movement has come to standstill.

Calculation of the safety distance to EN ISO 13855 and EN ISO 13857

The safety distance depends on the following elements:
- Stopping time of the machine (calculation by run-on time measurement)
- Response time of the machine and the safety light barrier and the downstream safety-monitoring module (entire safety guard)
- Approach speed

Safety light barrier

The safety distance for the safety light barrier is calculated by means of the following formula:

S = (1600 mm/s x T)+ 1200 [mm]

S = Safety distance [mm]
T = Total reaction time (machine run-on time, reaction time of the safety guard, relays, etc.)

To prevent unintended reaching over or creeping under the AOPD, the beam should be installed 750 mm above the ground or reference level (see EN ISO 13857).

For safety light barriers, the following points must be observed:
- Prevent the possibility of going under or over the beam
- Prevent the possibility of reaching through between two beams
- Prevent the possibility of climbing through between two beams

Safety distance to the hazardous area

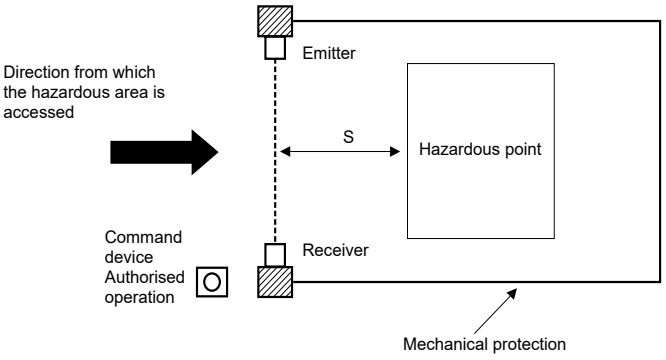

Please observe the applicable harmonised standards and possible applicable national regulations.

The safety distance between the safety light barrier and the hazardous point must always be respected and observed. If a person reaches the hazardous point before the hazardous movement has come to a standstill, he or she is exposed to serious injuries.

The AOPD should be located parallel with the floor and the beam should be interrupted by the upright body of a person. A single beam AOPD as the only guard system is not suitable for preventing the whole body of a person from accessing. We recommend combining the AOPD with other protective equipment to make it impossible to pass by the guard system without being detected in the process.

To calculate the minimum distances of the safety guards with regards to the hazardous point, the EN ISO 13855 and EN ISO 13857 must be observed.

3.5.1 Minimum distance to reflecting surfaces

During the installation, the effects of reflecting surfaces must be taken into account. In case of an incorrect installation, interruptions of the protection field could possibly not be detected, which could lead to serious injuries. The hereafter specified minimum distances with regard to reflecting surfaces (metal walls, floors, ceilings or parts) must imperatively be observed.

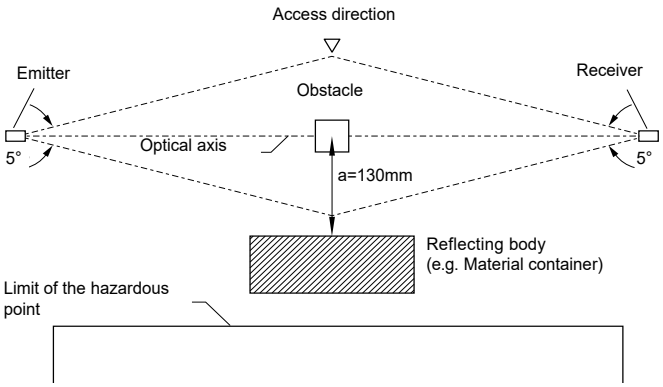

Safety distance a

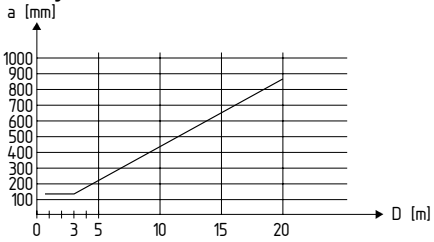

Calculate the minimum distance to reflecting surfaces as a function of the distance with an aperture angles of ± 2.5° degrees or use the value from the table below:

Distance between emitter and receiver [m]	Minimum distance a [mm]
0.2 … 3.0	130
4	175
5	220
7	310
10	440
12	530

Formula: a = tan 2.5° x L [mm]

a = Minimum distance to reflecting surfaces
L = Distance between emitter and receiver

3.6 Interference / Beam coding

If there is a risk of a receiver picking up the light signals from other emitters, each AOPD must be operated with its own beam coding.

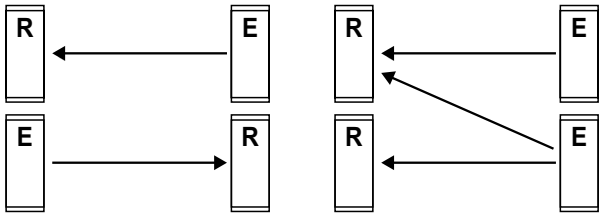

No interference

Reciprocal interference!
Beam coding is required

Four different beam codings can be set (see section on setting the parameters). The beam coding must be set in pairs (emitter and receiver).

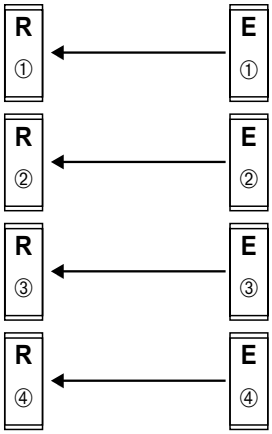

Reciprocal interference from systems is to be avoided by choosing suitable mounting positions or by configuring different beam codings.

The user is at risk if systems are operated with reciprocal interference.

The response time of the system changes with the selected beam coding. The safety distance must be adapted accordingly. See section on reaction time.

When the system starts, the integrated signal lamp indicates the set beam coding by the corresponding number of light impulses.

If an AOPD is operated with no other neighbouring systems, beam coding 5 with a very short reaction time (7 ms) can be selected.

3.7 Dimensions

Dimensions of emitter and receiver SLB440-ER-x-ST

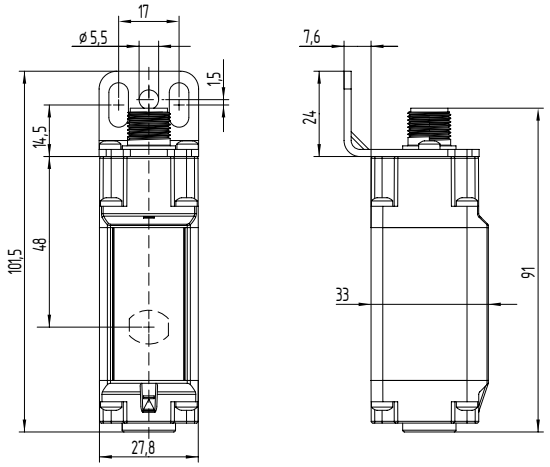

Dimensions of emitter and receiver SLB440-ER-x-LST

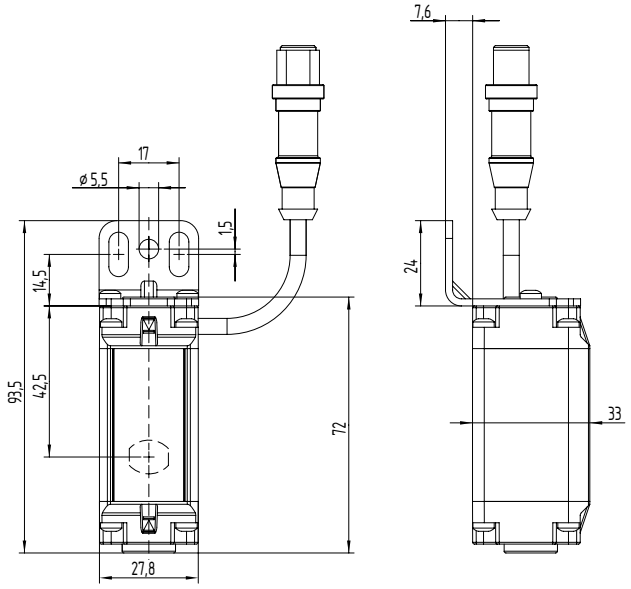

Dimensions emitter and receiver SLB440-ER-x-ST-H(-EH)

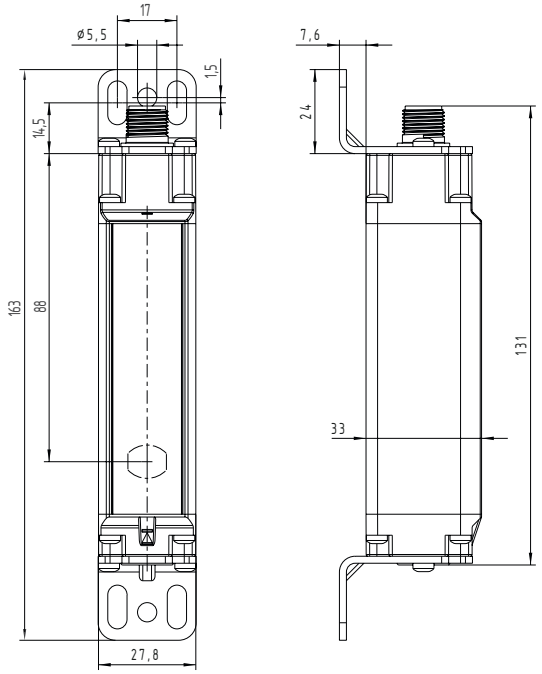

Dimensions emitter and receiver SLB440-ER-x-LST-H(-EH)

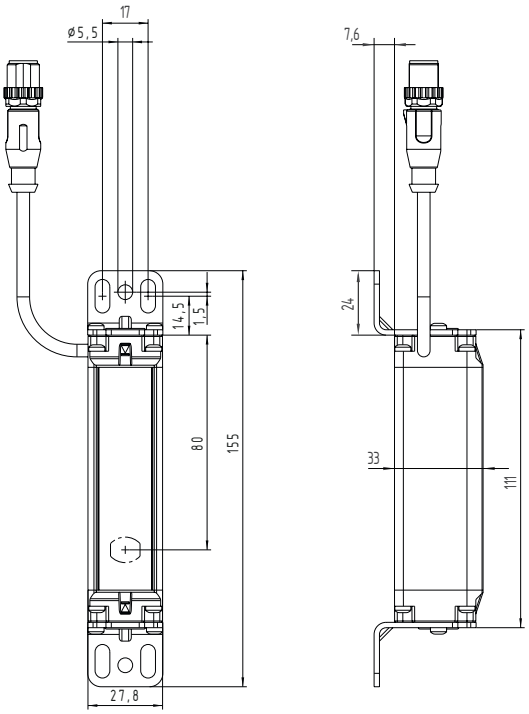

Version LST:
Emitter: Cable outlet bottom left
Receiver: Cable outlet bottom right
Cable length: 200 mm

3.8 Mounting material (Not included in delivery!)

Mounting kit MS-1101 (SLB440)
The mounting kit consists of 2 steel brackets and 4 fixing screws (Type Torx plus 10IP).

Mounting kit MS-1100 (SLB440-H)
The mounting kit consists of 4 steel brackets and 8 fixing screws (Type Torx plus 10IP).

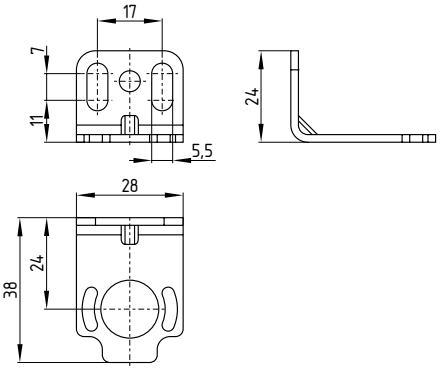

Connecting cable for emitter / receiver (4-pole)

Item Number	Designation	Description	Length
101207741	KA-0804	Female connector M12, 4-pole	5 m
101207742	KA-0805	Female connector M12, 4-pole	10 m
101207743	KA-0808	Female connector M12, 4-pole	20 m

Connecting cable for receiver (5-pole)*

Item Number	Designation	Description	Length
103010816	A-K5P-M12-S-G-5M-BK-2-X-A-4-69	Female connector M12, 5-pole	5 m
103010818	A-K5P-M12-S-G-10M-BK-2-X-A-4-69	Female connector M12, 5-pole	10 m
103010820	A-K5P-M12-S-G-15M-BK-2-X-A-4-69	Female connector M12, 5-pole	15 m

* For use in the operating mode Restart Interlock (manual reset)

Adapter cable for parameter setting

Item Number	Designation	Description	Length
103013625	KA-0977	Pushbutton with command device 1 x male connector M12, 5-pole 2 x female connector M12, 5-pole	3 m

Electric heater (only SLB440-ER-x-x-H-EH)

Recommended wiring for SLB440-H-EH with electric heater:
- Maximum cable length 2 m for KA-0804 and A-K5P-M12-S-G-5m-BK-2-X-A-1
- Cable cross section to 25 m range: 1.5 mm² - for supply +24V and 0V
- Cable cross section from 25 m to 75 m range: 2 x 1.5 mm² / 1 x 4.0 mm² - for supply +24V and 0V

At larger distances (>15 m), it is recommended to supply both sensors of the AOPD with separate mains units to keep the cable lengths short.

Following installation, the operating voltage must be measured at the last terminal to the heater. If the operating voltage is outside the specification, this is indicated by a "flashing white" status signal. In this case, the operating voltage must be adjusted.

The power supply is to be dimensioned with a sufficient power reserve, for one sensor 3A, for both sensors 4A.

4. Electrical connection

4.1 Wiring example SLB440

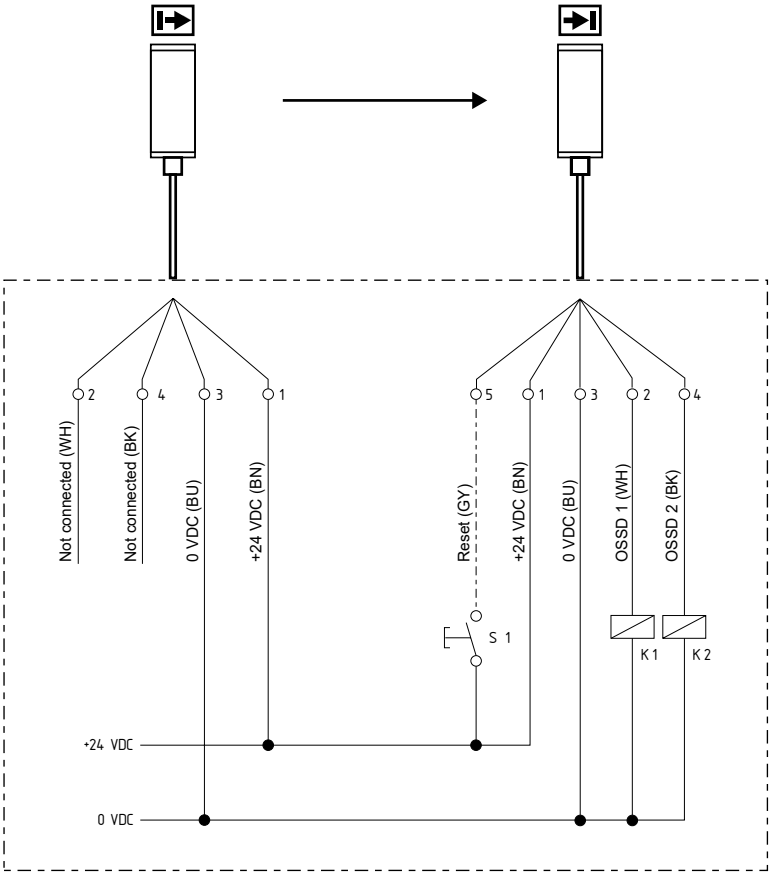

4.2 Wiring example SLB440-H

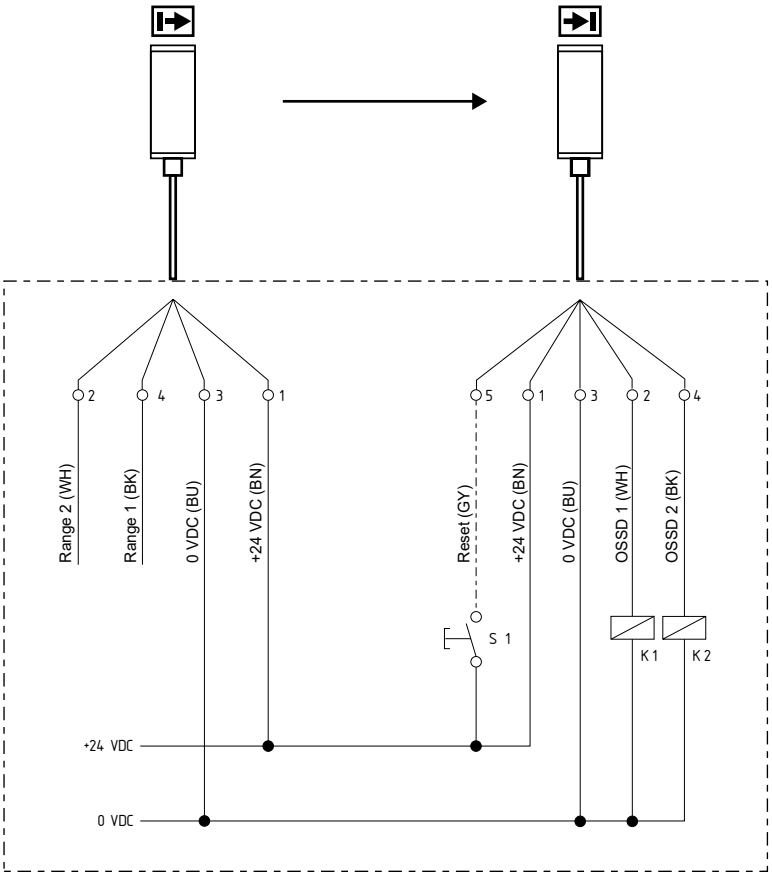

Protective mode / Automatic active:
Delivery state (Command device button S1 not connected)

Restart Interlock (manual reset) active:
Refer to the chapter: operating mode activate restart interlock (Command device button 1 connected)

K1, K2:	Relay for processing the switching outputs OSSD 1,OSSD 2
S1:	Command device pushbutton for restart (optional)
Range1, 2:	Adjustment of emitter range

4.3 Connector configuration Receiver, Emitter & Cable

4.3.1 SLB440

EMITTER
Connector, M12, 4-pin

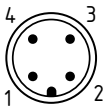

PIN	Designation	Description
1	+24 V	Power supply
2	NC	Unassigned
3	0 V	Power supply
4	NC	Unassigned

Connector female, M12, 4-pin

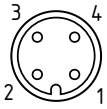

RECEIVER
Connector, M12, 5-pin

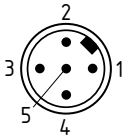

PIN	Designation	Description
1 BN	+24 V	Power supply
2 WH	OSSD1	Safety output 1
3 BU	0 V	Power supply
4 BK	OSSD2	Safety output 2
5 GY	Reset	restart interlook reset

Connector female, M12, 5-pin

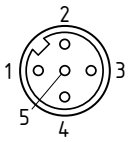

4.3.2 SLB440-H

EMITTER
Connector, M12, 4-pin

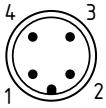

PIN	Designation	Description
1	+24 V	Power supply (with heater)
2	Range 2	Unassigned = Standard 0V = Alternative range
3	0 V	Power supply
4	Range 1	Unassigned = Standard +24V = Alternative range

Connector female, M12, 4-pin

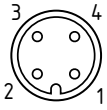

RECEIVER
Connector, M12, 5-pin

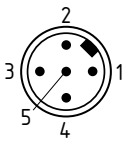

PIN	Designation	Description
1 BN	+24 V	Power supply (with heater)
2 WH	OSSD1	Safety output 1
3 BU	0 V	Power supply
4 BK	OSSD2	Safety output 2
5 GY	Reset	restart interlook reset

Connector female, M12, 5-pin

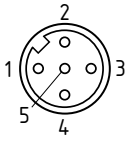

5. Set-up and maintenance

5.1 Check before start-up

Prior to start-up, the following items must be checked by the responsible person.

Wiring check prior to start-up

1. A 24V direct current power supply unit (see technical data) must be used for the voltage supply. A power downtime of 20 ms must be bridged.
2. Presence of a voltage supply with correct polarity at the AOPD.
3. The connecting cable of the emitter is correctly connected to the emitter and the connecting cable of the receiver correctly to the receiver.
4. The double insulation between the output and an external potential is assured.
5. The outputs OSSD1 and OSSD2 are not connected to +24 VDC.
6. The connected switching elements (load) are not connected to +24 VDC.
7. If two or more AOPDs are used within close range compared to each other, an alternating arrangement must be observed. Any mutual interference of the systems must be prevented.

Switch the AOPD on and check the operation in the following way:
The component performs a system test during approx. 2 seconds after the operating voltage has been switched on. The outputs are then enabled if the protection field is not interrupted. The status indication at the receiver is on.

In case of incorrect functionality, please follow the instructions listed in the chapter Fault diagnostic.

5.2 Maintenance

Do not use the AOPD before the next inspection is terminated. An incorrect inspection can lead to serious and mortal injuries.

Conditions
For safety reasons, all inspection results must be archived.
The operating principle of the AOPD and the machine must be known in order to be able to conduct an inspection. If the fitter, the planning technician and the operator are different persons, please make sure that the user has the necessary information at his disposal to be able conduct the maintenance.

5.3 Regular check

A regular visual inspection and functional test, including the following steps, is recommended:

1. The component does not have any visible damages.
2. The optics cover is not scratched or soiled.
3. Hazardous machinery parts can only be accessed by passing through the protection zone of the AOPD.
4. The staff remains within the detection area, when works are conducted on hazardous machinery parts.
5. The safety distance of the application exceeds the mathematically calculated one.

Operate the machine and check whether the hazardous movement stops under the hereafter mentioned circumstances.

1. Hazardous machine parts do not move when the protection field is interrupted.
2. The hazardous machine movement is immediately stopped, when the protection field is interrupted with the test rod immediately before the emitter, immediately before the receiver and in the middle between the emitter and the receiver.
3. No hazardous machine movement when the test rod is within the protection field.
4. The hazardous machine movement comes to standstill, when the voltage supply of the AOPD is switched off.

5.4 Half-yearly inspection

The following items must be checked every six months or when a machine setting is changed.

1. Machine stops or does not inhibit any safety function.
2. No machine modification or connection change, which affects the safety system, has taken place.
3. The outputs of the AOPD are correctly connected to the machine.
4. The total response time of the machine does not exceed the response time calculated during the first putting into operation.
5. The cables, the connectors, the caps and the mounting angles are in perfect condition.

5.5 Cleaning

If the optics cover of the sensors is extremely soiled, the OSSD outputs can be disabled. Clean with a clean, soft cloth with low pressure.
The use of agressive, abrasive or scratching cleaning agents, which could attack the surface, is prohibited.

6. Diagnostic

Emitters and receivers are equipped with an integrated signal lamp in the transparent end cap. The signal lamp indicates the operating status or, in the event of a fault, a fault code.

If there are no faults during operation, the status indicator on the emitter goes out after 10 minutes.

6.1 Indication of configuration when system starts

The emitters and receivers indicate the set beam coding once for 5 seconds when the system starts. A number of short light impulses are output in the process, which correlates with the number of the beam coding.

On the receiver, the indicator is delayed until there is no change in the ON state or OFF state of the OSSDs for 5 seconds.

Only SLB440-H emitter:
If the emitter is configured for a high range, an additional light impulse is output for two seconds after the beam coding has been indicated.

6.2 Status display

Emitter Display	Status
Blue	Emitter operation, the indicator is switched off 10 minutes after the voltage is applied
Yellow	Setting mode
Red	Fault status, see section on fault indication
Cyan, magenta	Setting mode, see section on setting mode

Receiver Display	Status
Green	Status of OSSD safety switch outputs is ON, protection field is clear.
Yellow	Restart interlock is active, waiting for reset signal
Red	Status of OSSD safety switch outputs is OFF, protection field is not clear.
Red	Alternating OFF pulses signalise the fault status, see section on fault indicator.
Yellow, cyan, magenta	Parameterisation or setting mode, see section on parameterisation and setting mode.

6.3 Fault indication

If there is a fault, red stays on and the fault number is indicated by way of OFF impulses. The number of impulses indicates the number of the fault.

Fault number	Cause
1	Wiring fault
2	Voltage fault in power supply.
3	Voltage fault in safety output OSSD1 or OSSD2.
4	Fault in heater regulation (only SLB440-H with integrated heater).
5	Incorrect configuration data.
6	Internal fault during self-test and diagnosis.

On the SLB440-H with integrated heater, if the power is higher or less than the permissible supply voltage, a warning is issued by white light impulses at a frequency of 1 Hz. The warning goes out as soon as the supply voltage is within the expected voltage range.

7. Disassembly and disposal

7.1 Disassembly

The safety device must be disassembled in a de-energised condition only.

7.2 Disposal

The safety device must be disposed of in an appropriate manner in accordance with the national prescriptions and legislations.

8. Appendix

8.1 Contact

Consultancy / Sales:
K.A. Schmersal GmbH & Co. KG
Möddinghofe 30
D-42279 Wuppertal
Tel.: +49 (0)2 02 - 64 74 - 0
Fax: +49 (0)2 02 - 64 74 - 100

You will also find detailed information regarding our product variety on our website: products.schmersal.com

Repair handling / shipping:
Safety Control GmbH
Am Industriepark 2a
D-84453 Mühldorf/ Inn
Tel.: +49 (0) 86 31 - 1 87 96 - 0
Fax: +49 (0) 86 31 - 1 87 96 - 1

9. EU Declaration of conformity

EU Declaration of conformity

SCHMERSAL

Original

Safety Control GmbH
Am Industriepark 2a
84453 Mühldorf / Inn
Germany

We hereby certify that the hereafter described components both in their basic design and construction conform to the applicable European Directives.

Name of the component:	SLB440	
Type:	See ordering code	
Description of the component:	Safety light barriers	
Relevant Directives:	Machinery Directive EMC-Directive RoHS-Directive	2006/42/EC 2014/30/EU 2011/65/EU
Applied standards:	EN 61496-1:2013, EN 61496-2:2013, EN ISO 13849-1:2015, EN 62061:2005 + Cor.:2010 + A1:2013 + A2:2015	
Notified body for the prototype test:	TÜV NORD CERT GmbH Am TÜV 1, 45307 Essen ID n°: 0044	
EC-prototype test certificate:	44 205 16 019907	
Person authorised for the compilation of the technical documentation:	Oliver Wacker Möddinghofe 30 42279 Wuppertal	
Place and date of issue:	Mühldorf, July 16, 2022	

SLB440-B-EN

Authorised signature
Klaus Schuster
Managing Director

Authorised signature
Christian Spranger
Managing Director

The currently valid declaration of conformity can be downloaded from the internet at products.schmersal.com.

K.A. Schmersal GmbH & Co. KG
Möddinghofe 30, 42279 Wuppertal
Germany
Phone: +49 202 6474-0
Telefax: +49 202 6474-100
E-Mail: info@schmersal.com
Internet: www.schmersal.com