PTS 525 Series
Microminiature Tact Switch for SMT



Features/Benefits

- ***Ultra low profile, 0.8 & 1.5 mm actuator height***
- ***Long life***
- ***Compact package of 5.25 x 5.25 mm saves PCB space***
- ***RoHS compliant and compatible***

Typical Applications

- ***Consumer products***
- ***Instrumentation***
- ***Computer products***
- ***Hand-held devices***

Specification

FUNCTION: Momentary action
CONTACT ARRANGEMENT: SPST, N.O.
TERMINALS: PC pins

Mechanical

ACTUATION FORCE: PTS525 models: 160 grams, 260 grams
LIFE EXPECTANCY: 100,000 operations.

Electrical

CONTACT RATING: 50 mA @ 12 V DC.
DIELECTRIC STRENGTH: 250 V AC min.
CONTACT RESISTANCE: 100 mΩ max. initial.
INSULATION RESISTANCE: 10^{11} Ω min.
ELECTRICAL TRAVEL: 0,30 ± 0,15 mm

NOTE: Specifications listed above are for switches with standard options.
For information on specific and custom switches, consult Customer Service Center.

Environmental

OPERATING TEMPERATURE: -40˚C to 60˚C

Process

SMT capable of IR solder process. Lead free soldering process compatible. Do not clean switch with ¡solvents.

Materials

BASE: 6/6 nylon or glass filled polyester (PBT) (UL 94V-0).
ACTUATOR: 6/6 nylon or polyacetal (UL 94HB).
DOME CONTACTS: Phosphor bronze, silver clad.
STATIONARY CONTACTS: Brass, silver plated.
TERMINALS: Brass, silver plated. Insert molded.

Packaging

3000 pieces per Tape and Reel

How To Order

Our easy build-a-switch concept allows you to mix and match options to create the switch you need. To order, select desired option from each category and place it in the appropriate box.

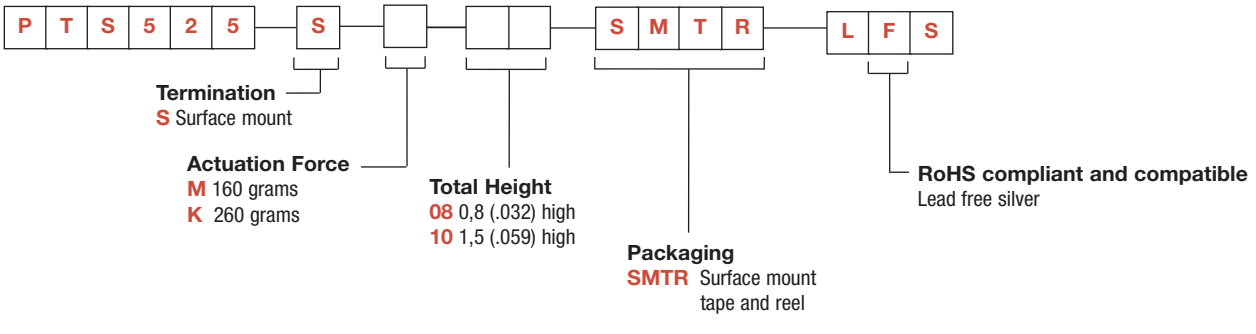

First Angle Projection

Dimensions are shown: mm (inches)
Specifications and dimensions subject to change

PTS 525 Series
Microminiature Tact Switch for SMT

SM08 0,8 MM HIGH

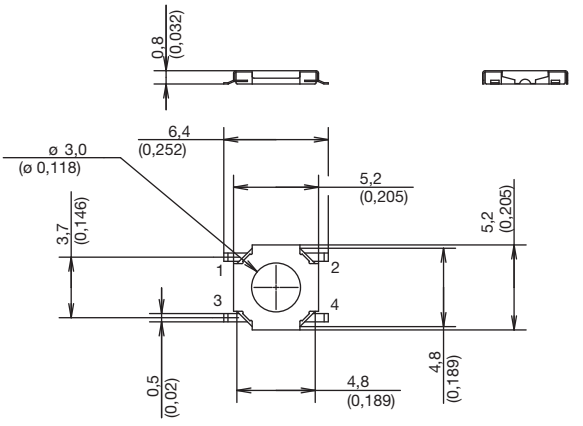

CIRCUIT DIAGRAM

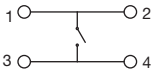

PCB LAYOUT

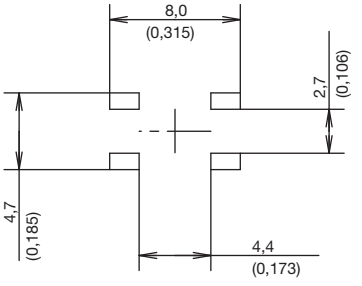

SM10 1,5 MM HIGH

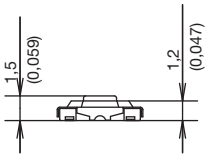

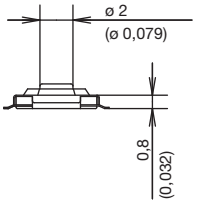

CIRCUIT DIAGRAM

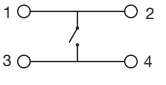

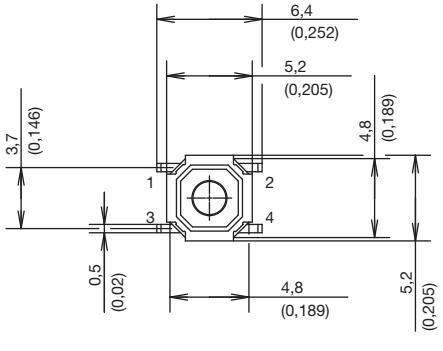

PCB LAYOUT

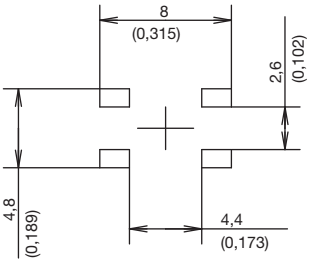

TAPE & REEL

SM08

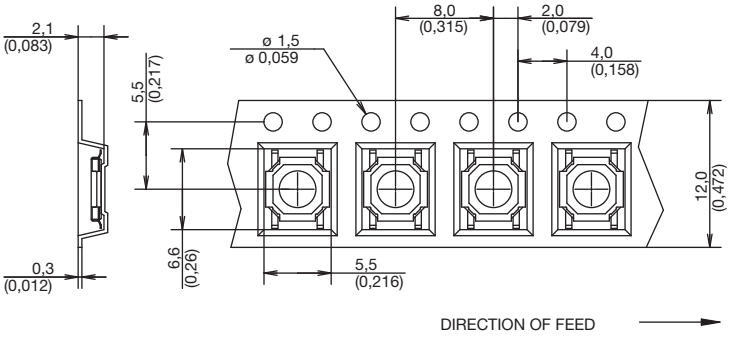

DIRECTION OF FEED

SM10

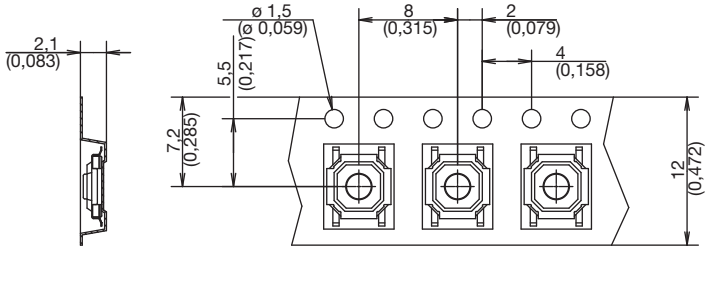

DIRECTION OF FEED

First Angle Projection

Dimensions are shown: mm (inches)
Specifications and dimensions subject to change