MD & MDP Series
Sealed Tactile Switch

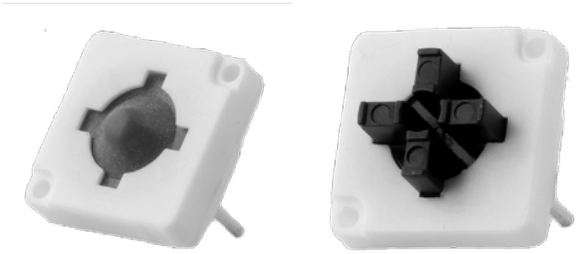

MD
(Soft Actuator)

MDP
(Hard Actuator)

Description

Aircraft instruments and panels need to be reliable and long-lasting. That's why so many designers in the industry turn to the MD series of short travel, self-cleaning keyswitches. Available in two actuator forces, the MD sealed tactile switch series are built to give end-users an excellent tactile feel every time. MDP keyswitches are perfect to give aircraft instruments, radio equipment, and panels the high-performing, long-lasting switches they need. MDP sealed tact switches are self-cleaning, available in two actuator forces, and perfect for short travel applications.

Features & Benefits

- Short travel
- Good tactile feedback
- Self cleaning
- 2 actuator materials
- RoHS

Applications

- Aircraft
- Instrument
- Panels
- Radio equipment

Specifications

Function	Momentary action
Contact Type	Normally open - SPST
Terminals	Through hole PCB terminations

Environmental & Electrical Characteristics

	Silver	**Gold**
Operating Temperature	-25°C to 70°C	-55°C to 85°C
Max. Power	1.0 VA	0.2 VA
Min./Max. Voltage	20m VDC - 100 VDC	
Min./Max. Current	1 mA to 100 mA	50µA to 50 mA
Dielectric Strength	≥ 250 Vrms	
Contact Resistance	≤ 100 mΩ	
Insulation Resistance	Initial measurement ≥ 1 GΩ After damp heat ≥ 10 MΩ	
Bounce Time	≤ 3 ms	

© 2024 Littelfuse, Inc.
Specifications are subject to change without notice.
Revised: CM.12/17/24

MD & MDP Series
Sealed Tactile Switch

Mechanical Characteristics

Type	Operating force N (grams)	Tactile feeling Δ%	Operating life	Travel mm
MD	2.4 N ± 25%	≥ 15%	1,000,000	0.95 mm ± 0.35
MDP	2.6 N ± 25%	≥ 25%	200,000	0.4 mm ± 0.25

MD

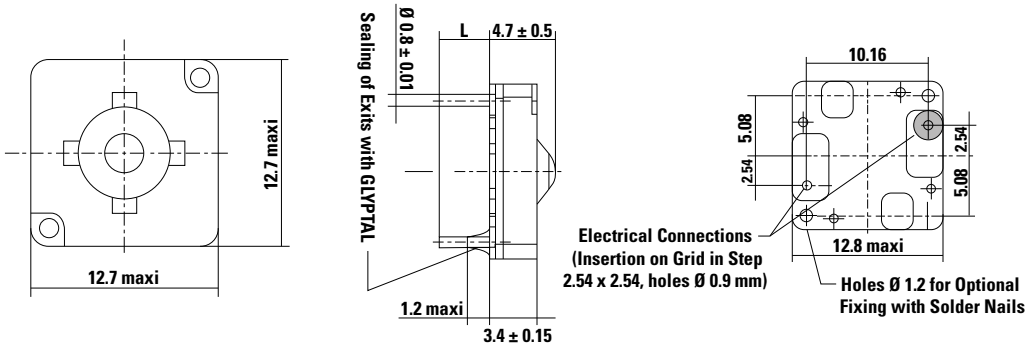

MDP

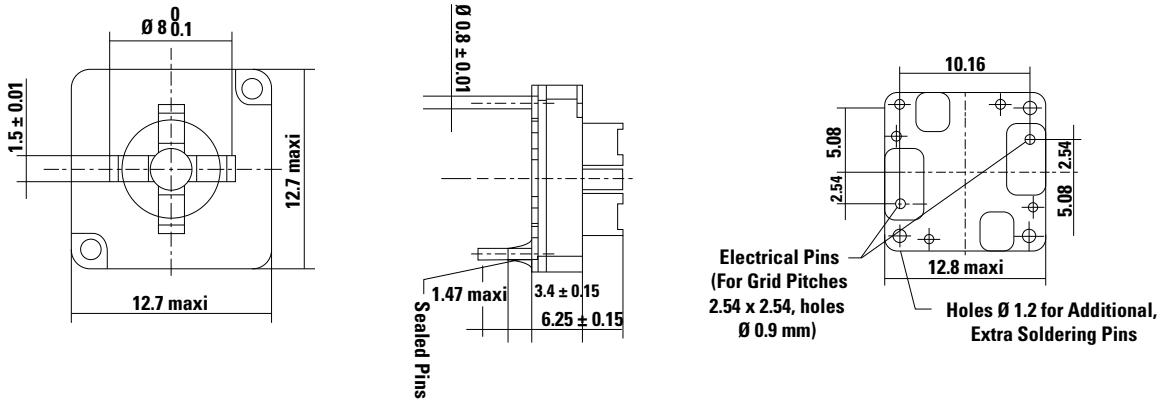

MDP button

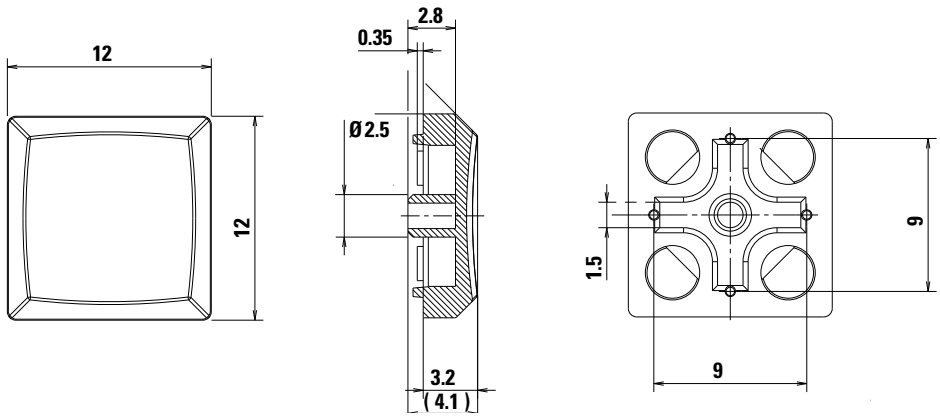

© 2024 Littelfuse, Inc.
Specifications are subject to change without notice.
Revised: CM.12/17/24

MD & MDP Series
Sealed Tactile Switch

Ordering Number

Our easy build-a-switch concept allows you to mix and match options to create the switch you need. To order, select desired option from each category and place it in the appropriate box.

MDx - x - x - LFS

- **Designation**
  - **MD:** Soft actuator
  - **MDP:** Hard actuator
- **Contact Material**
  - **S:** Silver
  - **G:** Gold
- **Terminals**
  - **Nothing:** Not sealed
  - **SG:** Sealed
- **Lead Free Compatible**
  - **LFS:** RoHS, Silver tabs

BTN-MDP - x

- **Button**
- **MDP Series Only**
- **Color**
  - **00:** White
  - **10:** Dark grey
  - **20:** Light grey
  - **30:** Yellow
  - **40:** Red
  - **50:** Green
  - **60:** Blue
  - **80:** Ivory
  - **90:** Black

Liability Limitation

This datasheet does not provide enough information for applications that require a certain level of quality or safety such as automotive, medical systems, or safety equipement. Please contact customer service for the contractual specification package.

Disclaimer Notice - Information furnished is believed to be accurate and reliable. However, users should independently evaluate the suitability of and test each product selected for their own applications. Littelfuse products are not designed for, and may not be used in, all applications. Read complete Disclaimer Notice at http://www.littelfuse.com/disclaimer-electronics.

© 2024 Littelfuse, Inc.
Specifications are subject to change without notice.
Revised: CM.12/17/24