WATERPROOF SINGLE-POLE ROCKER SWITCH

KC Series

Features

- Enclosed switch complying to IP56
- Lighted and non-lighted versions
- Multiple terminal options
- Mechanical life: 100,000 cycles
- DC electrical life: 6,000 cycles

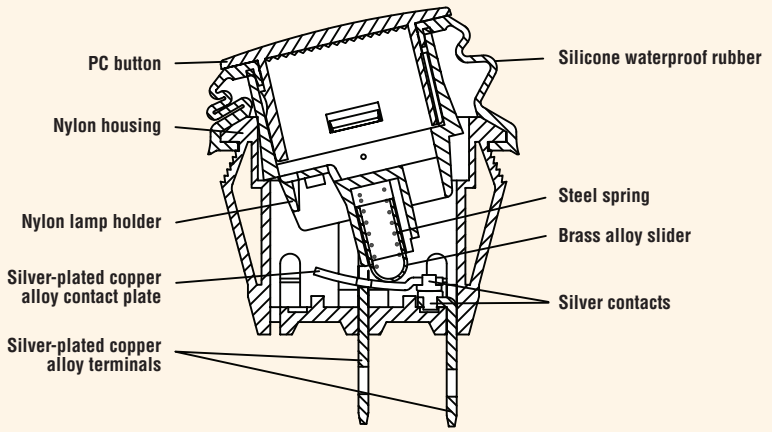

Electrical Ratings

Switch Series	VDC	EN61058 Rating	UL1054 Rating	Electrical Life at Rated Load According to VDE (Min. Operations)	Electrical Life at Rated Load According to UL (Min. Operations)
KC	20A 14VDC; 10A 28VDC	10(4)A 250V	16A 125VAC; 10A 250VAC	10,000	6,000



Specifications

Electrical	
Dielectric Strength:	1500VAC for 1 minute
Insulation Resistance:	10^8 ohms min at 500VDC
Initial Contact Resistance:	0.050 ohms max
Temperature Rating:	-25°C to +85°C
Materials	
Actuator:	Polycarbonate 94V-2
Housing:	Nylon 66 94V-2
Spring:	Stainless Wire
Contacts:	Silver Alloy
Movable Arm:	Silver-plated Copper Alloy
Terminals:	Silver-plated Copper Alloy
Waterproof Rubber:	Silicone

Dimensions inches (mm)

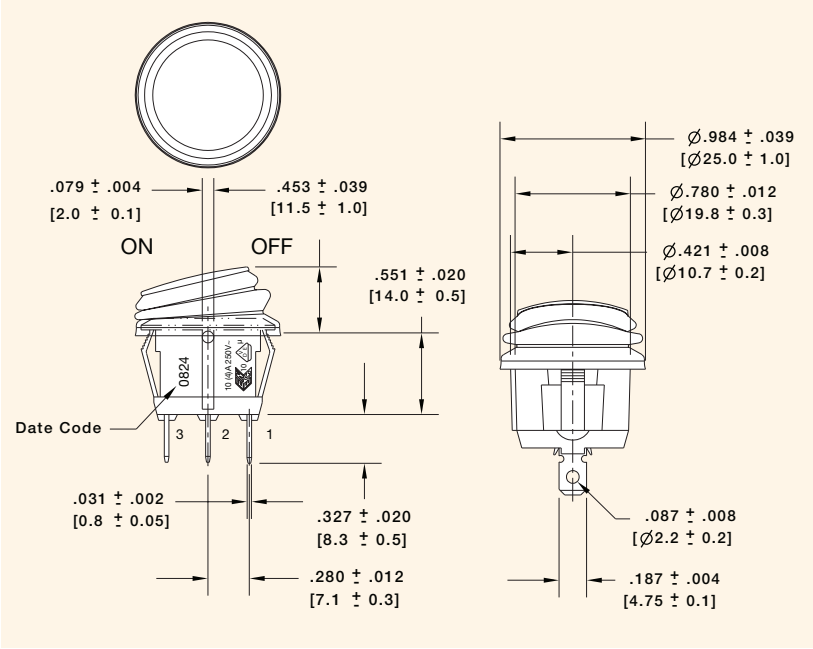

Panel Cut-Out Dimensions for Panel Thickness inches (mm)

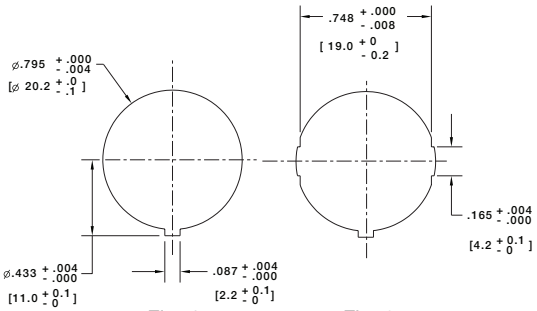

Fig. 1 Fig. 2

Mounting Holes	
Fig.	**Panel Thickness**
1	.059 to .098 (1.5 to 2.5)
2	.028 to .098 (0.7 to 2.5)

Examples of Common Part Numbers and Descriptions inches (mm)

Part Number	Circuitry	Switch Function	Terminal Type	Actuator/ Housing Color	Legend Marking
KCA2ANA1BBB		On – Off	0.187 (4.75) Quick Connect	Black/Black	
KCA2ALA2RBB	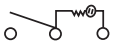	On – Off (Illuminated)	0.187 (4.75) Quick Connect	Red/Black (Red Lens)	

Ordering Information

KC A 2 A N A 1 B B B B

Series

Code	Contact Rating
A	16A 125VAC (UL) 10A 250VAC (UL) 10(4)A 250V (VDE) 20A 14VDC 10A 28VDC

Code	Circuitry
2	Single-Pole

Code	Switch Function
A	On – Off

Code	Non-Lighted/Lighted
N	Non-Lighted
L	110V Neon Bulb
E	220V Neon Bulb

Code	Terminal Type
A	0.187 (4.75) Quick Connect
P	PC Through Hole Straight
R	Solder (Round) 0.173 (4.4) Dia

Code	Actuator Type
1	Non-Lighted
2	Lighted

Code	Actuator Color
A	Amber
B	Black
G	Green
L	Blue
R	Red

Code	Housing Color
B	Black

Code	Actuator Marking
B	Blank
C	•
D	O –
E	O I
F	I II
G	– =
J	ON OFF

©2009 Cherry Corporation