Product datasheet

Specifications



Photoelectric sensors XU, XU9, polarised, Sn 2 m, 12...24 VDC, M12

XU9N18PP341D

Main

Range of product	Telemecanique Photoelectric sensors XU
Series name	Application food and beverage
Electronic sensor type	Photo-electric sensor
Sensor name	XU9
Sensor design	Cylindrical M18
Detection system	Polarised reflex
Material	Stainless steel
Line of sight type	Axial
Type of output signal	Discrete
Supply circuit type	DC
Wiring technique	3-wire
Discrete output type	PNP
Discrete output function	1 NO or 1 NC programmable
Electrical connection	1 male connector M12, 4 pins
Product specific application	-
Emission	Red polarised reflex
[Sn] nominal sensing distance	2 m polarised reflex need reflector XUZC50

Complementary

Enclosure material	Stainless steel : 304 CU
Lens material	PMMA
Maximum sensing distance	3 m
Output type	Solid state
Add on output	Without
Add on input	Programmation
Cable composition	4 x 0.34 mm²
Wire insulation material	PvR
Cable outer diameter	4.2 mm
Status LED	1 LED (green) for supply on

Disclaimer: This documentation is not intended as a substitute for and is not to be used for determining suitability or reliability of these products for specific user applications

	1 LED (yellow) for output state
[Us] rated supply voltage	12...24 V DC with reverse polarity protection
Supply voltage limits	10…30 V DC
Switching capacity in mA	<= 100 mA (overload and short-circuit protection)
Switching frequency	<= 500 Hz
Maximum voltage drop	<1.5 V (closed state)
Current consumption	<= 30 mA no-load
Maximum delay first up	15 ms
Maximum delay response	1 ms
Maximum delay recovery	1 ms
Setting-up	Without sensitivity adjustment
Diameter	18 mm
Length	64 mm
Net weight	0.085 kg
Kit composition	Reflector XUZC50 Sensor

Environment

Product certifications	CE CSA UL
Ambient air temperature for operation	-25…55 °C
Ambient air temperature for storage	-40…70 °C
Vibration resistance	25 gn, amplitude = +/- 1.5 mm (f = 10…55 Hz) conforming to IEC 60068-2-6
Shock resistance	30 gn (duration = 11 ms) conforming to IEC 60068-2-27
IP degree of protection	IP67 conforming to IEC 60529

Packing Units

Unit Type of Package 1	PCE
Number of Units in Package 1	1
Package 1 Weight	88.0 g
Package 1 Height	6.4 cm
Package 1 width	9 cm
Package 1 Length	4.2 cm
Unit Type of Package 2	S01
Number of Units in Package 2	11
Package 2 Weight	1.183 kg
Package 2 Height	15 cm
Package 2 width	15 cm
Package 2 Length	40 cm

Offer Sustainability

Sustainable offer status	Green Premium product
REACh Regulation	REACh Declaration
EU RoHS Directive	Pro-active compliance (Product out of EU RoHS legal scope)

	EU RoHS Declaration
Mercury free	Yes
RoHS exemption information	Yes
Environmental Disclosure	Product Environmental Profile
Circularity Profile	End of Life Information

Contractual warranty

Warranty	18 months

Dimensions

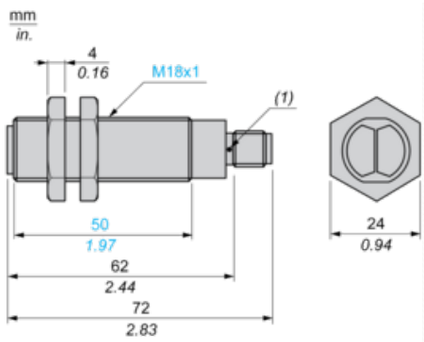

(1) LED

Mounting and Clearance

Fixing nut tightening torque: < 15 N.m
Connector tightening torque: 2 N.m

Wiring Schemes

M12 Connector

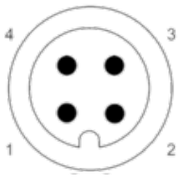

3 : (-)
1 : (+)
4 : OUT/Output
2 : Prog

3-wire, PNP NO or NC Programmable Function

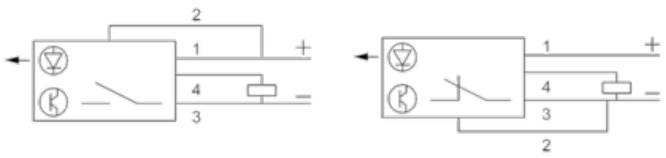

Detection Curves

Polarised Reflex System with Reflector XUZC50

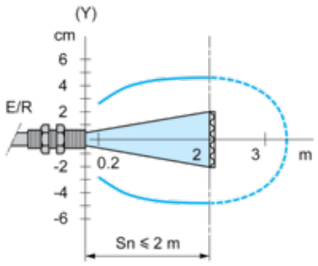

(y) Ø of beam

Excess Gain Curves (Ambient Temperature: + 25° C)

Polarised Reflex System with Reflector XUZC50

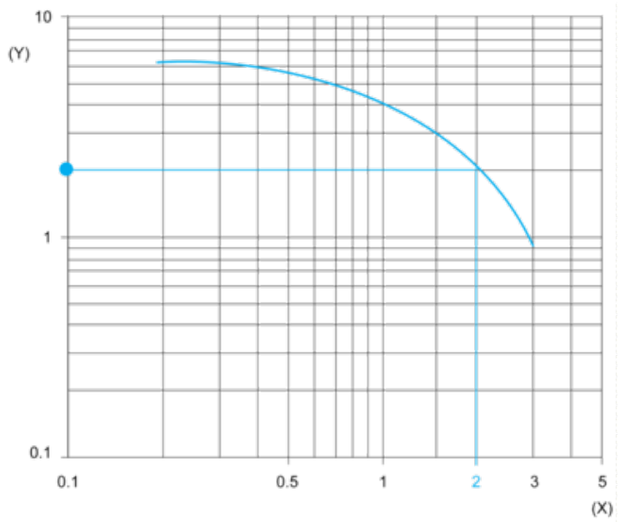

(y) Gain

(x) Distance (m)