Empty enclosure

AK 14 L-t



AK 14 L-t

Empty enclosure

CUSTOMIZABLE

Productnumber: 73341101
Dimensions: 315 x 300 x 147 mm

Empty enclosure, with protection class IP65, Plastic, certified according to DLG (Ammonia resistance), Ui=1000V AC, Ui=1500V DC, for AK 14-56 small distribution boards, for individual expansion by adding standard rails or assembly plates

Box: Plastic, grey, Lid: Polycarbonate, transparent, metric knockouts on top and bottom for universal cable insertions with cable glands and/or double membrane seals, elastic entries double membrane seals M20 on top

Accessories supplied:
Double-membrane seals: 1x M20, 1x M25, 1x M32, Attachment bushes: 1x M40, sealing plugs, masking and labelling strips

Created at 04.07.2023. All statements without guarantee. We reserve the right to make improvements to technical progress.
Günther Spelsberg GmbH + Co. KG
Im Gewerbepark 1 · D-58579 Schalksmühle · Telefon: +49 (0) 23 55 / 892-0 · Telefax: +49 (0) 23 55 / 892-299

Technical Data

electrical characteristics

Rated operating voltage AC:	400 V
Rated insulation voltage AC:	1000 V
Rated insulation voltage DC:	1500 V
Protection class:	II
Type of protection:	IP65
with N terminal:	no
with PE terminal:	no
UL Type Rating:	not specified

Colours

Base unit colour:	grey
Cover colour:	transparent

Dimensions

Width:	315 mm
Length:	300 mm
Height:	147 mm
Inner length:	310 mm
Inner width:	295 mm

Material characteristics

suitable for exterior use:	yes
Industry quality:	yes
Halogen free:	yes
Flammability class according with UL94:	V2
Glow-wire flammability according to EN 60695-2-11:	850 °C

mechanical properties

Type of fastening:	Surface mounted

mechanical properties

Impact strength:	IK08
Type of top part:	Cover

Ambient conditions

max. relative humidity 25°C:	95 %
max. relative humidity 40°C:	50 %
Min. ambient temperature:	-25 °C
Max. ambient temperature:	80 °C
24h ambient temperature:	60 °C
Set-up location:	Indoors

Material

Base unit material:	Plastic
Cover material:	Polycarbonate

Certificates

Test mark:	DLG (Ammonia resistance)

Accessories

73383701 - AK3 AS - External hinge

73383801 - AK3 MPI 14 L - Mounting plate

Cable gland

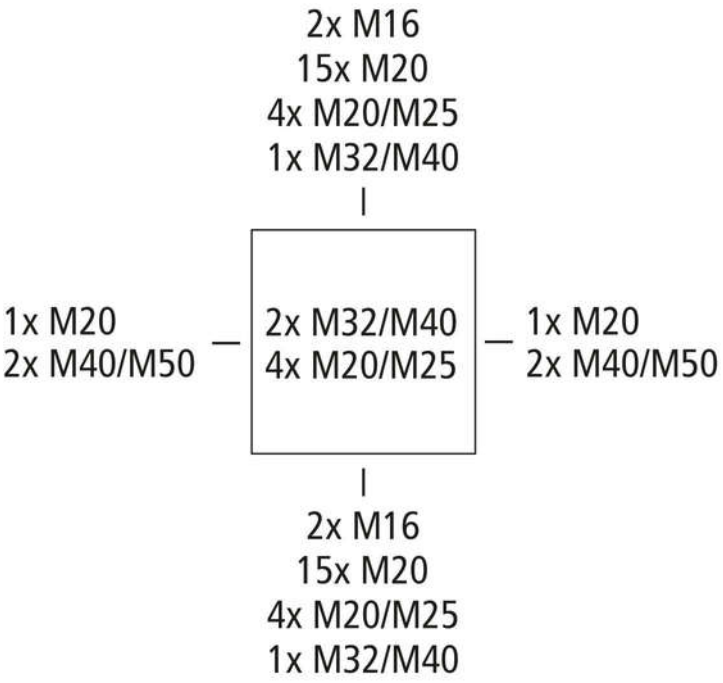
2x M16
15x M20
4x M20/M25
1x M32/M40
1x M20
2x M40/M50
2x M32/M40
4x M20/M25
1x M20
2x M40/M50
2x M16
15x M20
4x M20/M25
1x M32/M40