Your Expert Partner for **Human Machine Interfaces**

Lamp block

Distribution by
Rs-online

704.950.3



https://rs-online.eao.com/component/704.950.3...

Your product:



704.950.3
Lamp block

ELECTRICAL CHARACTERISTICS

Standards: The switches comply with the “Standards for low-voltage switching devices” DIN EN 60947-1/DIN EN 60947-5-1

MECHANICAL CHARACTERISTICS

Terminal: Push-in terminal

Switching positions: 2 positions

Wire cross section: Max. wire cross-section 2 wires with 1 mm
Skinning wire 8 mm
Max. wire cross-section of stranded cable 2 x 0.75 mm^2
use stranded wires only with wire end ferrules of 8 mm length
Only one polarity is allowed on each side when wiring.

Weight: 0.015 kg

AMBIENT CONDITION

IP Protection: IP20

Operating temperature: – 40 °C ... + 55 °C

Storage temperature: – 40 °C ... + 85 °C

Shock resistance: Max. 300 m/s^2, pulse width 11 ms (sinusoidal EN IEC 60068-2-27)

Vibration resistance: Max. 100 m / s^2 from 10 Hz ... 500 Hz, (sinusoidal EN IEC 60068-2-6)

Climate resistance: Relative humidity, max. 95%, non-condensing

CERTIFICATE

REACH: REACH compliant

RoHS: RoHS compliant

OTHER

Short Description: Lamp block, Plastic, Push-in terminal

Housing material: Plastic

Hints: When using the lamp block, the application guidelines must be observed.

Wiring diagrams:

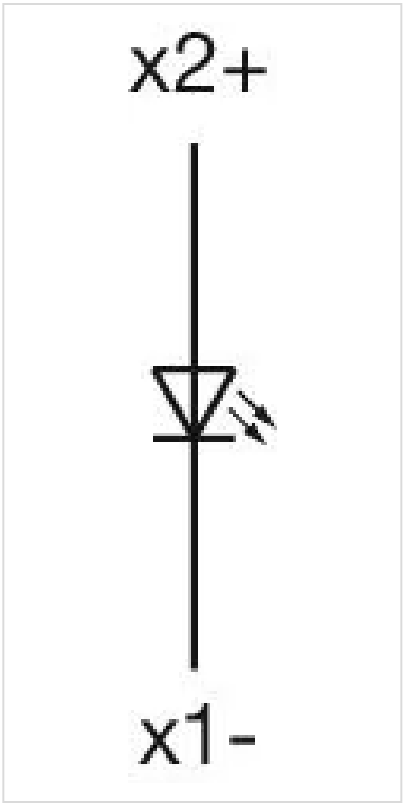

Dimension drawings:

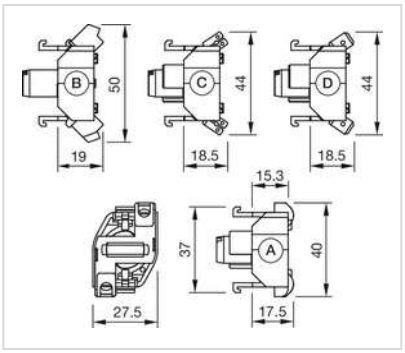

A = Screw terminal
B = Push-in terminal (PIT)
C = Plug-in terminal 6.3 mm x 0.8 mm
D = Double plug-in terminal 6.3 mm x 0.8 mm