AIM & THURLBY THANDAR INSTRUMENTS

QPX1200S & QPX1200SP

PowerFlex DC Power Supplies

INSTRUCTION MANUAL

Aim-TTi

Table of Contents

Specification	2
Safety	5
Installation	6
Connections	7
Initial Operation	9
Manual Operation	11
Remote Operation	18
Remote Commands (QPX1200SP only)	28
Maintenance	34

Note: The latest revisions of this manual, device drivers and software tools can be downloaded from: http://www.aimtti.com/support.

General specifications apply for the temperature range 5°C to 40°C. Accuracy specifications apply for the temperature range 18°C to 28°C after 1 hour warm-up with no load and calibration at 23°C. Typical specifications are determined by design and are not guaranteed.

OUTPUT SPECIFICATIONS

Voltage Range:	0V to 60V
Current Range:	0.01A to 50A
Power Range:	Up to 1200W
Voltage Setting:	Resolution 1mV Accuracy: 0.1% of setting ± 2mV
Current Setting:	Resolution 10mA Accuracy: 0.3% of setting ± 20mA
Operating Mode:	Constant voltage or constant current with automatic cross-over provided that the power demanded stays within the power envelope, see graph. Outside of this envelope the output becomes unregulated. CV, CC or UNREG mode indication in display.

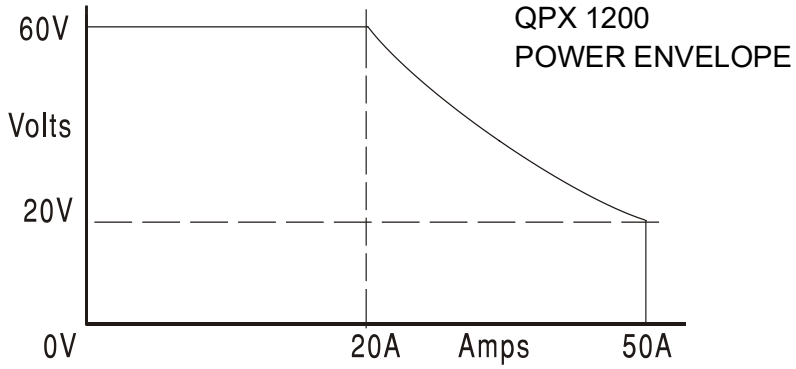

Output Switch:	Electronic, with ON indication. Preset voltage and current displayed when off.
Output Terminals:	Front panel safety terminals accepting 6mm wire diameter, 6mm plugs or 8mm spades at 50 Amps max, or 4mm plugs at 30 Amps max. Duplicate rear panel terminals.
Sensing:	Switchable between local and remote. Screwless remote sense terminals on both front and rear panels. Sense miswiring trip and indication.
Ripple & Noise (20MHz bandwidth):	Typically <3mVrms, <20mV pk-pk at maximum load, CV mode
Load Regulation:	Change in output for any load change within PowerFlex envelope, using remote sense: Constant voltage: <0.01% ± 5mV
Line Regulation:	Change in output for a 10% line change: Constant voltage: <0.01% ± 5mV
Transient Response:	<250us to within 100mV of set level for a 5% to 95% load change.

Output Protection:	Output will withstand an applied forward voltage of up to 70V. Reverse protection by diode clamp for reverse currents up to 3A.
Over-voltage Protection (OVP):	Range 1V to 65V. Resolution 0.1V; accuracy: 0.2% ± 0.2V. Response time typically 100μs.
Over-current Protection (OCP):	Range 2A to 55A. Resolution 0.1A; accuracy: 0.5% ± 0.2A. Response time typically 100ms.
Over-temperature Protection:	The output will be tripped off if a fault causes the internal temperature to rise excessively.
Temperature Coefficient:	Typically <100ppm/°C

Voltage Programming Speed

QPX1200S		90% LOAD	NO LOAD		90% LOAD	NO LOAD
60V	UP	100ms	100ms	DOWN	80ms	1.2s
12V	UP	82ms	82ms	DOWN	15ms	240ms

METER SPECIFICATIONS

Display Type:	5-digit (Volts), 4-digit (Amps), black-on-white backlit LCD.
Voltage (CC Mode and Unreg):	Resolution 1mV Accuracy: 0.1% of reading ± 2 digits
Current (CV Mode & Unreg):	Resolution 10mA Accuracy: 0.3% of reading ± 2 digits
V x A:	Resolution 0·1W Accuracy: 0·5% ± 0·1W
V/A:	Meter shows calculated nominal V/A value, together with uncertainty range; 5 digit resolution.

LOGIC CONTROL INPUT and OUTPUT

LOGIC IN is a rear-panel opto-isolated input with an 820Ω resistor in series that is activated at an input voltage greater than approximately 3.3V. The maximum voltage that can be applied without damaging the unit is 20V and the input should not be taken negative by more than 3V. User can set LOGIC IN (via the keyboard) to enable the output, disable the output, or be ignored when it is activated.

LOGIC OUT is an isolated rear-panel open-collector output that will sink up to 2mA when activated (‘switch closure’); the maximum voltage that can be applied to LOGIC OUT is 30VDC. User can set LOGIC OUT to be ‘closed’ or ‘open’ for output enabled or disabled, current limit (CC mode), power limit (UNREG mode), or for any fault trip.

ANALOG REMOTE CONTROL and MONITORING

Non-isolated inputs and outputs to set voltage and current limit and to monitor actual output voltage and current. These signals are referenced to the positive output and have a range of 0 to 10V or 0 to 5V (selectable via the keyboard).

Analogue Control Accuracy:	Voltage: 0.3% ± 4mV; Current: 0.5% ± 40mA
Analogue Monitor Accuracy:	Voltage: 0.3% ± 4mV; Current: 0.5% ± 40mA

KEYBOARD & ROTARY CONTROL

All functions, including the selection and set-up of the remote control interfaces, can be set from the keyboard. The rotary Jog control can be used to adjust output voltage and current settings in a quasi-analogue mode.

DISPLAY FEATURES

The display is a 256 x 112 pixel transflective LCD, backlit by white LEDs; contrast is software-controlled and can be adjusted from the keyboard.

The default status display shows the VOLTS (5 digits) and AMPS (4 digits) in 12mm high characters, plus the present output mode. At other times, for example during store or recall of instrument set-ups, the display shows up to 7 lines of information, instructions, or prompts.

INTERFACES (QPX1200SP only)

Full digital remote control facilities are available through the RS232, LAN, USB and GPIB (optional) interfaces. Setting and readback resolutions are the same as the Output and Meter specifications respectively.

RS232:	Standard 9-pin D-connector. Baud rate 9600.
USB:	Standard USB 2.0 hardware connection.
LAN:	Ethernet 100/10base-T hardware connection. 1.4 LXI Core 2011 compliant.
GPIB (optional):	Conforming with IEEE488.1 and IEEE488.2.
Remote Command Processing Time:	Typically <100ms between receiving the command terminator for a step voltage change at the instrument and the output voltage beginning to change.

GENERAL

AC Input:	110V – 240V AC ± 10%, 50/60Hz. Installation Category II.
Power Consumption:	1600VA max.
Operating Range:	+5ºC to +40ºC, 20% to 80% RH.
Storage Range:	–40ºC to + 70ºC.
Environmental:	Indoor use at altitudes up to 2000m, Pollution Degree 2.
Store/Recall:	Up to 10 set-ups can be saved and recalled via the keyboard or remote interfaces.
Safety:	Complies with EN61010-1 & EN61326-1. For details, request the EU Declaration of Conformity for this instrument via http://www.aimtti.com/support (serial no. needed).
Size:	130mm H (3U) x 356mm W x 413mm D
Weight:	9.2kg
Options:	19-inch rack kit.

This power supply is a Safety Class I instrument according to IEC classification and has been designed to meet the requirements of EN61010-1 (Safety Requirements for Electrical Equipment for Measurement, Control and Laboratory Use). It is an Installation Category II instrument intended for operation from a normal single phase supply.

This instrument has been tested in accordance with EN61010-1 and has been supplied in a safe condition. This instruction manual contains some information and warnings which have to be followed by the user to ensure safe operation and to retain the instrument in a safe condition.

This instrument has been designed for indoor use in a Pollution Degree 2 environment in the temperature range 5°C to 40°C, 20% - 80% RH (non-condensing). It may occasionally be subjected to temperatures between +5°C and –10°C without degradation of its safety. Do not operate while condensation is present.

Use of this instrument in a manner not specified by these instructions may impair the safety protection provided. Do not operate the instrument outside its rated supply voltages or environmental range.

WARNING! THIS INSTRUMENT MUST BE EARTHED

Any interruption of the mains earth conductor inside or outside the instrument will make the instrument dangerous. Intentional interruption is prohibited. The protective action must not be negated by the use of an extension cord without a protective conductor.

When the instrument is connected to its supply, terminals may be live and opening the covers or removal of parts (except those to which access can be gained by hand) is likely to expose live parts. The apparatus shall be disconnected from all voltage sources before it is opened for any adjustment, replacement, maintenance or repair.

Capacitors inside the power supply may still be charged even if the power supply has been disconnected from all voltage sources but will be safely discharged about 10 minutes after switching off power.

Any adjustment, maintenance and repair of the opened instrument under voltage shall be avoided as far as possible and, if inevitable, shall be carried out only by a skilled person who is aware of the hazard involved.

If the instrument is clearly defective, has been subject to mechanical damage, excessive moisture or chemical corrosion the safety protection may be impaired and the apparatus should be withdrawn from use and returned for checking and repair.

Make sure that only fuses with the required rated current and of the specified type are used for replacement. The use of makeshift fuses and the short-circuiting of fuse holders is prohibited.

Do not wet the instrument when cleaning it.

The following symbols are used on the instrument and in this manual:-


Earth (ground) terminal.


mains supply OFF.

mains supply ON.


alternating current (ac)


direct current (dc)

Mains Operating Voltage

This instrument has a universal input range and will operate from a nominal 115V or 230V mains supply without adjustment. Check that the local supply meets the AC Input requirement given in the Specification.

Mains Lead

Connect the instrument to the AC supply using the mains lead provided. Should a mains plug be required for a different mains outlet socket, a suitably rated and approved mains lead set should be used which is fitted with the required wall plug and an IEC60320 C13 connector for the instrument end. To determine the minimum current rating of the lead-set for the intended AC supply, refer to the power rating information on the equipment or in the Specification.

WARNING! THIS INSTRUMENT MUST BE EARTHED.

Any interruption of the mains earth conductor inside or outside the instrument will make the instrument dangerous. Intentional interruption is prohibited.

Mounting

This instrument is suitable both for bench use and rack mounting. It is delivered with feet for bench mounting. The front feet include a tilt mechanism for optimal panel angle.

A rack kit for mounting in a 19” rack is available from the Manufacturers or their overseas agents.

Ventilation

The power supply is cooled by intelligent multi-speed fans which vent at the rear. Take care not to restrict the air inlets at the side panels or the exit at the rear. In rack-mounted situations allow adequate space around the instrument and/or use a fan tray for forced cooling.

Front Panel Connections

The load should be connected to the positive (red) and negative (black) terminals marked OUTPUT. The terminals accept 4mm plugs into the end (but note that 4mm plugs will only support 32 Amps), 6mm diameter wire or plugs into the cross-hole or 8mm spade connections (with a maximum blade width of 16mm). The wiring and connectors must be capable of supporting the current required; for 50 Amps, 6mm^2 cable is needed.

Remote sense connections to the load, if required, are made from the positive (+) and negative (–) REMOTE SENSE terminals. Remote sense operation is selected from the keyboard or via a remote control interface; the front panel REMOTE SENSE lamp is lit when remote sense is selected. Switching off remote sense returns the instrument to local sensing at the front panel output terminals.

The terminal marked ⏚ is connected to the chassis and safety earth ground.

Rear Panel Connections

Output Terminals

The output and sense terminals are duplicated on the rear panel; these connections are paralleled with their front panel equivalents.

Remote sense operation is selected from the keyboard or via a remote control interface. When the rear panel terminals are used, remote sense should always be selected to ensure that output regulation is maintained within specification.

Logic Input

LOGIC IN is connected to the input of an isolating opto-coupler via an 820Ω resistor in series. The input is activated by an input voltage greater than approximately 3.3V between LOGIC IN and LOGIC COMMON; up to 20V may be applied to the input but it should not be taken negative by more than 3V. The active input current will be between 2mA and 25mA, depending on applied input voltage. The function of LOGIC IN is set from the keyboard.

⚠ Do not apply a voltage to LOGIC IN / LOGIC COMMON exceeding 50V with respect to ⏚.

Logic Output

LOGIC OUT is the open-collector output of an opto-isolated NPN transistor that will sink up to 2mA when active (‘switch closure’). The function of LOGIC OUT is set from the keyboard.

The maximum operating voltage that can be applied between LOGIC OUT and LOGIC COMMON is 30VDC.

⚠ Do not apply external voltages between the terminals exceeding 30VDC.

Analogue Control

V CONTROL and I CONTROL provide quasi-analogue control of the Output Voltage and Current Limit respectively. The CONTROL inputs are read 4 times per second by the A-to-D converter and the output is set according to the selected input scaling. The input scaling for both can be set as 0 to 10 Volts or 0 to 5 Volts for maximum output. The Analogue Control functions and scaling are both selected from the keyboard. The COMMON return signal is referenced to the positive output of the power supply.

⚠ Do not apply external voltages between the terminals exceeding 20VDC.

Analogue Monitor

The output terminal voltage and output current may be monitored on V MONITOR and I MONITOR respectively. The output scaling for both is the same as that set for V CONTROL and I CONTROL, see previous section. The COMMON return signal is referenced to the positive output of the power supply.



Do not apply external voltages to these terminals.

RS232 (QPX1200SP only)

9–pin female D–connector with pin connections as shown below. Can be connected to a standard PC port using a fully wired 1:1 male-female cable without any cross-over connections.

Pin	Name	Description
1	RI	Passively asserted (+V through 10kΩ)
2	TXD	Transmitted data from instrument
3	RXD	Received data to instrument
4	CTS	
5	GND	Signal ground
6	RTS	Passively asserted (+V through 10kΩ)
7	DSR	No internal connection
8	DTR	
9	CD	No internal connection

Signal ground is connected to instrument ground.

USB (QPX1200SP only)

The USB port is connected to instrument ground. It conforms with USB 2.0 (Full Speed) and accepts a standard USB cable. The Windows plug-and-play functions should automatically recognise that the instrument has been connected. If the correct driver is not found, follow the Windows on-screen prompts and install the required files from the CD supplied.

LAN (QPX1200SP only)

The LAN interface is designed to meet 1.4 LXI (Lan eXtensions for Instrumentation) Core 2011. Remote control using the LAN interface is possible using a TCP/IP Socket protocol. The instrument also contains a basic Web server which provides information on the unit and allows it to be configured. Since it is possible to misconfigure the LAN interface, making it impossible to communicate with the instrument over LAN, a LAN Configuration Initialise (LCI) mechanism is provided via a recessed switch on the rear panel (marked LAN RESET) to reset the unit to the factory default.

Further details are given in the Remote Operation chapter. For more information on LXI standards refer to www.lxistandard.org/home

GPIB (optional - QPX1200SP only)

The optional GPIB signal grounds are connected to the instrument ground. The implemented subsets are:

SH1 AH1 T6 L4 LEO SR1 RL2 PP1 DC1 DT0 C0 E2

The optional GPIB address is set from the front panel.

This section of the manual is a general introduction to the controls and operation of the instrument and is intended to be read before using the power supply for the first time.

In this manual front panel keys, connections and indicators are shown in capitals, e.g. ESCAPE, JOG SET, OUTPUT, ON. Messages shown on the display are printed in a different type-font, e.g. **Enter V**, **Limits**, **CV**, **Store**.

Switching On, Output On/Off

The power switch is located at the bottom left of the front panel.

At power-up the default behaviour is for the instrument's settings to be restored to those automatically saved when it was switched off, but with the Output always off (**OUTPUT OFF** is shown in the display). However, the user can change this default setting such that the Output is also restored at power-up to its status at power-down, see the Extra Functions section.

The DC Output is switched on and off electronically with alternate presses of the ⎓ key; the ON lamp illuminates when the Output is on. At the same time the message above the VOLTS and AMPS display changes from **OUTPUT OFF** to **CV** (constant voltage) or **CC** (constant current) to indicate the present operating mode; should the load cause the instrument to operate outside its guaranteed power range the display will instead show **UNREG** (unregulated).

Keypad

Only the principles of operation are outlined here; the setting of individual parameters is given in detail in later sections.

The paramount consideration in designing the user interface has been to make changing settings as 'safe' as possible (i.e. with minimal risk of accidentally applying excessive voltages to a target system) whilst achieving ease of use. This has been achieved by requiring the user to confirm (OK) new numeric settings, with the option to ESCAPE at any point or even to simply pause until the operation times-out and the instrument returns to its original settings. In addition, display messages and LED indicators prompt, guide or warn the user such that entry or control errors are minimised. Where some of these features (e.g. beeps) are considered unnecessary by regular users, the option exists to disable them, see the Extra Functions section.

Under normal conditions the numeric keypad is disabled; pressing any key will cause the buzzer to beep, indicating an illegal operation. To set a voltage with the keypad first press the V NUMERIC SET key; the VOLTS display changes to show the present set value in a smaller font, with the message **Enter V or ESC** below it, and the OK lamp starts flashing. The new value is then entered from the keyboard; as it is entered it is displayed directly below the present setting, replacing the prompt message. At any time during entry the new setting can be confirmed with the OK key, e.g. it is sufficient to key in 1, OK to change the setting to 1Volt. When OK is pressed the display reverts to show just the new setting in the full-size font and the OK lamp stops flashing; if OK is not pressed within 10 seconds of the last numeric key the entry is cancelled and the display returns to its original setting. If ESCAPE is pressed anytime in the entry procedure, entry is cancelled and the display returns to its original setting. The current limit is set in exactly the same way after first pressing I NUMERIC SET.

The OK key is used to confirm most keypad entries. At all other times it becomes the VIEW V/I LIMITS key and pressing it will cause the display to show preset output voltage and current limit for 3 seconds; during this period the **Limits** message shows in the display.

Pressing SHIFT illuminates the ▲ lamp and gives the numeric keys the functions marked above them, e.g. STR (Store), RCL (Recall), etc. When a shift function is selected SHIFT is cancelled (the ▲ lamp is no longer lit). The further key presses required to complete the selected function are described in detail in the sections that follow; if no key is pressed within 10 seconds to complete the function, the function will terminate as if ESCAPE has been pressed. SHIFT is a toggle key; pressing SHIFT again when it has been selected will cancel SHIFT. SHIFT is also cancelled by ESCAPE, or by pressing SET V or SET I.

Jog Control

The rotary 'jog' control permits the output voltage or current limit to be incremented or decremented in steps with a resolution set by the JOG SET keys; the output immediately follows the setting, i.e. no OK is required.

At power-up jog is always off. To jog the voltage or current setting press the V or I JOG SET key; the associated lamp will illuminate and the appropriate parameter display now changes to two lines. With the output ON the top line continues to show the actual output, but the additional lower display now shows the present **Limits** value; in the lower display, the JOG indicator (⇳) is positioned under the digit that was last jogged. Whilst the V or I JOG SET indicator is lit, each further press of the V or I key moves the JOG indicator one digit to the left; the selection 'wraps-round' such that when the largest value of jog increment has been reached the next press returns it to the lowest. The default position at power-up is under the LSD, i.e. the lowest jog increment is selected.

Turning the rotary jog control clockwise/anti-clockwise increments/decrements the selected digit; digits to the left of the one being jogged are automatically incremented/decremented when the decade overflow/underflow point is reached. Digits to the right of the one being jogged remain unchanged unless the jog step overflows/underflows the maximum/minimum settings in which case they are set to zero. For example, 59·861V goes to 59·961V goes to 60·000V for a 0.1V jog increment; 1.60A goes to 0·60A goes to 0·01A for a 1A jog decrement.

The jog steps that can be selected are 1mV, 10mV, 100mV and 10mA, 100mA, 1A.

To disable the jog rotary control press the JOG SET OFF key; reselecting JOG SET V or I will enable jog on the last used digit position. Jog is not cancelled by using numeric entry or any of the SHIFT functions but it is disabled whilst that function is enabled.

Note that the dual display of the parameter being jogged is primarily of use if the output is ON; with the output off both lines of the display show the **Limits** value and change simultaneously as the parameter is jogged.

Display

At power-up the display briefly shows the instrument model number and installed firmware revision (Keyboard and Control firmware revision on the left; Interface firmware on the right) before reverting to the standard status display.

The standard status display shows the voltage on the left (above the front panel VOLTS marking) and the current on the right (above the front panel AMPS marking) together with the present output status, i.e. **OUTPUT OFF**, **CV**, **CC**, or **UNREG**; if the output is off then **Limits** is also shown in the display above the V and I values. The status of the LAN connection is also shown in the top left corner of the display, as required for LXI compliance. Refer to the 'LAN Status Indication' paragraph in the LAN Interface section for details. During other operations, however, the display capabilities are used more extensively to show, for example, prompts during function settings, e.g. memory store and recall operations or the extra functions accessed via the # shift function; details are given in the relevant sections of this manual.

The display contrast is set at the factory but can be adjusted from the keyboard to optimise it for particular ambient operating conditions. Press SHIFT, # , select Extra Function 90, and follow the on-screen prompts.

New users should first read the Initial Operation chapter which describes the operating principles of the keypad and rotary jog control.

Set Voltage

With the ⎓ output off, the standard status display shows the set voltage; **Limits** shows as a reminder beside **OUTPUT OFF** in the top line of the display. With the output ON the mode changes to **CV** (constant voltage) or **CC** (constant current), depending on the set current limit and load conditions, and the display shows the actual output voltage (measured at the sense point); note that in CC mode the actual output voltage will be less than the set voltage. Both the set and actual voltage are shown to a resolution of 1mV. If the set voltage and load conditions cause the instrument to operate outside its guaranteed power range the display will show **UNREG** (unregulated) and the actual output voltage will again be less than the set voltage.

The voltage can be set directly from the numeric keypad: press the NUMERIC SET V key, enter the new value using the numeric keys and confirm by pressing OK. The broad principles of keypad entry are explained in the Initial Operation chapter, which should be read by new users.

When SET V is pressed the VOLTS display changes to show the present set value in a smaller font, with the message **Enter V or ESC** below it, and the OK lamp starts flashing. The new voltage is then entered from the keyboard, e.g. 12·345V is entered as 1, 2, ·, 3, 4, 5. As it is entered it is displayed directly below the present setting, replacing the prompt message.

The minimum voltage setting is 0·000V; the maximum setting is 60·000V.

Pressing OK at any point will set the voltage entered with any remaining digits set to zero, e.g. 1, 2, ·, 3, OK will set 12·300V; 1, OK will set 1·000V. When OK is pressed the set voltage is changed and the display reverts to the standard status mode.

Pressing ESCAPE at any time during the sequence, or making no further key press within 10 seconds of the previous one will cause the display to return to its original reading before SET V was pressed.

Entering a voltage outside the range maximum (including trying to enter 3 digits before the decimal point) or trying to enter more than 5 digits will cause the buzzer to beep; the last key entry will be ignored.

The voltage can also be set using the Jog control. Pressing JOG SET V will illuminate the V JOG SET lamp and the VOLTS display will again change to two lines. With the output ON the top line continues to show the actual output, but the additional lower display now shows the present **Limits** value; in the lower display, the JOG indicator (⇳) is positioned under the digit that was last jogged. Whilst the V SET lamp is lit, each further press will move the ⇳ JOG indicator one digit to the left; the selection 'wraps round' such that when the largest value of jog increment has been reached the next press returns it to the lowest. The default position at power-up is under the LSD, i.e. the lowest jog increment is selected. The jog steps that can be selected are 1mV, 10mV and 100mV.

With jog enabled the output voltage can be incremented or decremented with the rotary jog control with a step resolution indicated by the position of the ⇳ JOG indicator. The output immediately follows the setting, i.e. no OK is required. In CV (constant voltage) mode the actual output voltage shown in the upper display line will follow the set voltage being ‘Jogged’ in the lower display; however, if the output goes into constant current mode (indicated by the CV status message being replaced by CC) the upper display, showing actual voltage, will show a value which is less than the set voltage.

Note that the dual display during JOG SET V is primarily of use if the output is ON; with the output off both lines of the display show the **Limits** value and change simultaneously as the voltage is jogged.

Set Current Limit

With the output off, the standard status display shows the set current limit; with the output on it shows the actual output current in all modes (CV, CC or UNREG). Both the actual current and the current limit are shown to a resolution of 10mA.

The current limit can be set directly from the numeric keypad: press the NUMERIC SET I key, enter the new value using the numeric keys and confirm by pressing OK. The broad principles of keypad entry are explained in the Initial Operation chapter, which should be read by new users.

When SET I is pressed the AMPS display changes to show the present current limit value in a smaller font, with the message **`Enter I or ESC`** below it, and the OK lamp starts flashing. The new current limit is then entered from the keyboard, e.g. 12·34A is entered as 1, 2, ·, 3, 4. As it is entered it is displayed directly below the present setting, replacing the prompt message.

The minimum current setting is 0·01A; the maximum setting is 50.00A, i.e. there is no over-range capability.

Pressing OK at any point will set the current entered with any remaining digits set to zero, e.g. 1, 2 ·, 3, OK will set 12·30A; 1, OK will set 1·00A. When OK is pressed the current limit is changed and the display reverts to the standard status mode.

Pressing ESCAPE at any time during the sequence, or making no key press within 10 seconds of the previous one will cause the display to return to its original reading before SET I was pressed.

Entering a value outside the range maximum (including trying to enter 3 digits before the decimal point) or trying to enter more than 4 digits will cause the buzzer to beep; the last key entry will be ignored.

The current limit can also be set using the rotary jog control. Pressing JOG SET I will illuminate the I JOG SET lamp and the AMPS display will again change to two lines. With the output ON the top line continues to show the actual output, but the additional lower display now shows the present current limit; in the lower display, the JOG indicator (⬍) is positioned under the digit that was last jogged. Whilst the I SET lamp is lit, each further press will move the ⬍ JOG indicator one digit to the left; the selection 'wraps round' such that when the largest value of jog increment has been reached the next press returns it to the lowest. The default position at power-up is under the LSD, i.e. the lowest jog increment is selected. The jog steps that can be selected are 10mA , 100mA and 1A.

With jog enabled the current limit can be incremented or decremented with the rotary jog control with a step resolution indicated by the position of the ⬍ JOG indicator. The output immediately follows the setting, i.e. no OK is required. With the output ON and in CV mode the upper line of the display showing actual current will be a lower value than the current limit being ‘Jogged’ in the lower display; however, if the output goes into constant current mode (indicated by the CV status message being replaced by CC) the upper display, showing actual current, will follow the current limit value being ‘Jogged’ in the lower display.

Note that the dual display during JOG SET I is primarily of use if the output is ON; with the output off both lines of the display show the **`Limits`** value and change simultaneously as the current limit is jogged.

Instantaneous Current Output

The current limit control can be set to limit the continuous output current to levels down to 10mA. However, in common with all precision bench power supplies, a capacitor is connected across the output to maintain stability and good transient response. This capacitor charges to the output voltage and short-circuiting of the output will produce a current pulse as the capacitor discharges which is independent of the current limit setting.

Output Power (V x A)

If SHIFT, V x A is pressed the display shows the product of measured output voltage x measured current in the form **nn.n VA**. . The V x A value is updated at the same measurement rate as for V and I. Pressing ESCAPE cancels V x A mode.

Calculated Load Impedance (V/A)

If SHIFT, V/A is pressed the display shows the calculated result of measured output voltage ÷ measured current; this is a sampled result which can be updated by further presses of the OK key. Pressing ESCAPE cancels V/A mode.

The display shows the calculated nominal V/A value with a resolution of 5 significant digits (10µΩ resolution for V/A <1Ω). The accuracy is calculated from the uncertainty of the individual voltage and current measurements and is indicated by showing the minimum and maximum possible values (in brackets) beside the nominal. The uncertainty is worst when either (or both) V and I are small.

This function is extremely useful for measuring low impedances at high currents, e.g. $R_{DS(on)}$ of power MOSFETs. Always use the Remote Sensing function to eliminate the effects of connecting lead and contact resistance when making low value V/A measurements.

Current Measurement Averaging

Press SHIFT, I_{AVG} to select current averaging; **I_{AVG}** shows in the top line of the display beside the mode status. The AMPS reading is still updated at the same rate (4 times per second) but the value displayed is the rolling average of the last 4 current measurements made.

Connection to the Load

The load should be connected to the positive (red) and negative (black) OUTPUT terminals. Both are fully floating and either can be connected to ground.

Remote Sensing

The instrument has a very low output impedance, but this is inevitably increased by the resistance of the connecting leads and the contact resistance between terminals and leads. At high currents this can result in significant differences between the indicated source voltage and the actual load voltage (even two 2mΩ connecting leads will drop 0·2V at 50 Amps, for instance). This problem can be minimised by using short, thick, connecting leads, but where necessary it can be completely overcome by using the remote sense capability.

This requires the sense terminals to be connected to the output at the load instead of at the source; insert wires into the spring-loaded REMOTE SENSE terminals and connect directly to the load.

Select remote sense by pressing SHIFT, SENSE; the message **Turn On Remote sense? OK to confirm, ESCAPE to cancel** is shown in the display and the OK lamp flashes. Press OK to confirm or press ESCAPE to exit without changing state; the REMOTE SENSE lamp above the front panel terminals lights when remote sense is selected. Remote sense is turned off by pressing SHIFT, SENSE again; the message **Turn Off Remote Sense? OK to confirm, ESCAPE to cancel** is shown in the display and the OK lamp flashes. Press OK to confirm or press ESCAPE to exit without changing state; the REMOTE SENSE lamp above the front panel terminals is off when remote sense is deselected.

To avoid instability and transient response problems, care must be taken to ensure good coupling between each output and sense lead; this can best be done by twisting the leads together. An electrolytic capacitor directly across the load connection point may also be beneficial.

The voltage drop in each output lead must not exceed 1 Volt.

The power supply has rear panel output and sense terminals, appropriate for when the instrument is used in a rack. The rear panel remote sense terminals should always be used with the rear panel output connections.

Sense Miswiring Trip

The output will be tripped off if the voltage between an output terminal and its corresponding sense terminal exceeds approximately 2V; this will happen if the sense wires are wired at the load to the wrong output or if an attempt is made to draw power from the sense wires.

If the sense terminals are miswired in this way the output is turned off and the message **`Sense Error – Check Connections`** is displayed. Pressing ESCAPE at this point removes the message and the display now shows the preset voltage and current limit. When the cause of the trip has been corrected the output can be turned on again.

Series or Parallel Connection with Other Outputs

The outputs of the power supply are fully floating and may be used in series with other power supply units to generate high DC voltages up to 300VDC.

The maximum permissible voltage between any terminal and earth ground (⏚) is 300VDC.

WARNING! Such voltages are exceedingly hazardous and great care should be taken to shield the output terminals for such use. On no account should the output terminals be touched when the unit is switched on under such use. All connections to the terminals must be made with the power switched off on all units.

It should be noted that the unit can only source current and cannot sink it, thus units cannot be series connected in anti-phase.

The unit can be connected in parallel with others to produce higher currents. Where several units are connected in parallel, the output voltage will be equal to that of the unit with the highest output voltage setting until the current drawn exceeds its current limit setting, upon which the output will fall to that of the next highest setting, and so on. In constant current mode, units can be connected in parallel to provide a current equal to the sum of the current limit settings.

Note that the output terminals are rated at 60A maximum; if several outputs are operated in parallel to source higher currents than this the junction should be made at a separate point, not one of the terminals.

Over-Voltage Protection

Over-Voltage Protection (OVP) can be set from 1·0V to 65.0V. If the output voltage exceeds the set OVP the output is immediately turned off (typically within 100µs), thus avoiding damage to the circuit under test. The OVP circuit will trip if an excessive voltage is accidentally set from the front panel or via a remote control interface, or is the result of a failure in the control circuitry of the instrument itself. OVP will also trip if an excessive voltage is impressed across the terminals from an external source; however, when the output is tripped off, the external voltage will still be present and it is up to the user to remove the source to avoid possible damage.

To set OVP press SHIFT, OVP. The display changes to show only the present **`OVP`** setting together with the prompt **`Numeric Entry: Range 1-65`** ; the OK lamp flashes. Enter the new OVP value using the numeric keypad, exactly as described for setting output voltage, and press OK to confirm the new setting; to exit without entering a new value press ESCAPE. The factory default setting is 65·0V.

If the OVP is tripped the display shows the message **`OVP - Press ESC to Reset`** and the output is turned off. Pressing ESCAPE at this point removes the message and the display now shows the preset voltage and current limit. When the cause of the OVP has been removed (or the OVP limit changed) the output can be turned on again.

Note also that it is possible and valid to set OVP below the set voltage. If the supply is in constant current mode the output voltage will be below the set voltage; OVP could be set such that is was above the actual output voltage but below the set voltage. This could be used to trip the output under a fault condition which caused the load impedance to increase and the actual output voltage to therefore rise above the OVP point.

Over-Current Protection

Over-Current Protection (OCP) can be set from 2.0A to 55.0A. If the output current exceeds the set OCP the output is shut down (typically within 100ms).

To set OCP press SHIFT, OCP. The display changes to show only the present **OCP** setting together with the prompt **Numeric Entry: Range 2-55** ; the OK lamp flashes. Enter the new OCP value using the numeric keypad, exactly as described for setting the current limit, and press OK to confirm the new setting; to exit without entering a new value press ESCAPE. The factory default setting is 55·0A.

If the OCP is tripped the display shows the message **OCP - Press ESC to Reset** and the output is turned off. Pressing ESCAPE at this point removes the message and the display now shows the preset voltage and current limit. When the cause of the OCP has been removed (or the OCP limit changed) the output can be turned on again.

Note also that it is possible and valid to set OCP below the set current limit. For example, the power supply may be used to repetitively test a unit under test (UUT) which normally takes a peak current of, say, 10 Amps. However, a faulty UUT would take a current of more than 10 Amps and would be damaged by being left in a 10 Amp current-limited state. In this case the current limit could be set to 11A, say, and the OCP set to 10A to ensure that a faulty UUT will trip the supply off.

Output Protection

In addition to OVP and OCP for forward over-voltage and over-current protection, the output is protected from reverse voltages by a diode; the continuous reverse current must not exceed 3 Amps although transients can be much higher.

Temperature Trip and Other Faults

If the safe internal temperature limit is exceeded because, for example, the fan vents have been blocked, the output is automatically tripped off. The display will show a message indicating that a fault has occurred and that the AC supply must be turned off and on again to reset the unit. If over-temperature is suspected, the cause of the fault should be rectified and the unit allowed to cool before the AC supply is turned on again.

Note that an over-temperature trip shuts down the primary side of the instrument and it is that condition that is detected and causes the fault message to be displayed. However, other faults may occur which would also cause the primary side to shut down and these will not be distinguishable from an over-temperature trip. If the unit does not restart after being allowed to cool then another fault might be present and the unit should be returned for service.

Logic Control Input and Output

Digital signal connections LOGIC IN and LOGIC OUT are available on the rear panel; press the orange actuators of the screwless terminals, insert the connecting wire and release the actuator to secure the connection. LOGIC IN is connected to the input of an isolating opto-coupler via an 820Ω resistor in series. The input is activated by an input voltage greater than approximately 3.3V between LOGIC IN and LOGIC COMMON; do not apply an input voltage greater than 20V. LOGIC IN can be set to enable the output, disable the output, or be ignored when it is activated, see the Extra Functions section. Note that LOGIC IN can only be used to enable/disable the output if the output has already been turned ON with the front panel ⎓ key or by remote interface command; this permits the front panel ⎓ key to be used to turn the output off in an emergency, i.e. to override LOGIC IN. Note also that, having turned the output ON with the ⎓ key, the ON lamp remains lit even when the output is disabled by the LOGIC IN signal.

LOGIC OUT is an isolated rear-panel open-collector output that will sink up to 2mA when active ('switch closure'); the maximum voltage that can be applied to LOGIC OUT is 30Vdc. LOGIC OUT can be set to be 'closed' or 'open' for output enabled or disabled, current limit (CC mode), power limit (UNREG mode), or for any fault trip. The default condition is for LOGIC OUT to be 'closed' for the Output ON; loss of AC power, which would deactivate the opto, is also reliably detected with this setting. See Extra Functions section for further details.

Analogue Control

Rear panel connections V CONTROL and I CONTROL provide quasi-analogue control of the Output Voltage and Current Limit respectively. The CONTROL inputs are read 4 times per second by the A-to-D converter and the output is set according to the selected input scaling. The input scaling for both can be set as 0 to 10 Volts or 0 to 5 Volts for maximum output. The Analogue Control functions and scaling are both selected from the keyboard, see Extra Functions section.

The COMMON return signal is referenced to the positive output of the power supply.

Analogue Control is activated from the Bus menu, see Remote Operation section. When activated, the top line of the display shows which functions (V and/or I) have been selected and the corresponding functions on the front panel (NUMERIC SET / JOG SET for V and/or I) are inhibited to avoid contention between Analogue Control and front panel operation.

Analogue Monitor

The output terminal voltage and output current may be monitored on V MONITOR and I MONITOR respectively. The output scaling for both will be the same as that set for V CONTROL and I CONTROL, see above section. V MONITOR and I MONITOR are always available at the rear panel terminals.

The COMMON return signal is referenced to the positive output of the power supply.

Store Settings

The instrument can store 10 set-ups in non-volatile memory; the parameters stored are voltage, current limit, OVP and OCP. The output state and remote sense setting are not stored.
To store a set-up press SHIFT, STORE to show the store locations and the currently saved set-ups on the **Store** screen.

The store location to be used can be selected directly by pressing any key 0 – 9 or by scrolling to the appropriate store number in the list using the JOG SET control; the selected store is indicated by the square brackets **[ ]** at that location. Press OK to store the set-up at the selected location; the screen returns to the standard status display. A full store can be overwritten with new settings. At any time before the OK key is pressed the store function can be exited without saving a set-up by pressing ESCAPE or by waiting for the operation to time out.

Deleting Stored Settings

Any store can be returned to 'empty' as follows: press SHIFT, STORE, and select the appropriate store number as described in the Store Settings section above; at that point press **.** followed by OK to confirm the operation. At any time before the OK key is pressed the delete function can be exited without erasing a set-up by pressing ESCAPE or by waiting for the operation to time out.

Recall Settings

To recall a set-up press SHIFT, RECALL to show the store locations and the currently saved set-ups on the **Recall** screen. Each store location is displayed with its output voltage, current limit, OVP and OCP settings; the output status (on/off) and sense settings (local/remote) are not stored. Empty store locations are shown without data.

The store location containing the setting to be recalled can be selected directly by pressing any key 0 – 9 or by scrolling to the appropriate store number in the list using the JOG SET control; the selected store is indicated by the square brackets **[ ]** at that location. Press OK to recall the set-up at the selected location; the screen returns to the standard status display. Settings may be recalled with the output on or off.

Extra Functions

Options for extra functions such as LOGIC CONTROL and ANALOGUE CONTROL/MONITOR, plus variations on some of the factory default functions, can be set by the user by using the # extra functions facility. The complete list of functions is accessed by pressing SHIFT, # ; the required function can be selected directly by entering nn from the keyboard, where nn is the 2-digit number in the list below, or by scrolling to the appropriate function in the list using the JOG SET control; the selected function is indicated by the square brackets **[ ]** at that position in the list. Press OK to initiate the selected function, following the on-screen prompts where appropriate. At any time before the OK key is pressed the extra function can be exited without implementation by pressing ESCAPE or by waiting for the operation to time out.

Selected functions are indicated by a ✓ beside the code in the on-screen list. Note that the options within any decade group are mutually exclusive and selecting a function within any group will automatically deselect any previously selected function in that group, including the factory default option; for example, if **#** 26 is selected, 20 -25 and 27 are all deselected.

# Code	Function
10	Output always off at power-up (factory default)
11	Output status at power-up same as at last power-down
20	LOGIC OUT 'closed' for Output ON, 'open' for Output OFF (factory default)
21	LOGIC OUT ‘closed' for Output OFF, 'open' for Output ON
22	LOGIC OUT ‘closed’ for any trip
23	LOGIC OUT ‘open’ for any trip
24	LOGIC OUT ‘closed’ for UNREG
25	LOGIC OUT ’open’ for UNREG
26	LOGIC OUT ‘closed’ for CC (current limit)
27	LOGIC OUT ‘open’ for CC (current limit)
30	Buzzer on. A single beep indicates a wrong entry (factory default)
31	Buzzer off
40	V CONTROL and I CONTROL both selected (factory default)
41	V CONTROL only selected
42	I CONTROL only selected
50	V CONTROL and I CONTROL scaling 0 to 10 Volts (factory default)
51	V CONTROL and I CONTROL scaling 0 to 5 Volts
60	LOGIC IN ignored (factory default)
61	LOGIC IN active enables output
62	LOGIC IN active disables output
90	LCD contrast adjustment
91	Restores factory defaults, including these # settings
99	Enter calibration mode. Refer to Service Manual

Factory Default Settings

The ex-factory default settings (which will apply at first power-up) are as follows:

Voltage:	0.000V
Current Limit:	1.00A
OVP:	65.0V
OCP:	55.0A
Output:	Output off; local sense
# Settings:	10, 20, 30, 40, 50, 60 active

The QPX1200SP can be remotely controlled via its RS232, USB, GPIB (optional), LAN or Analogue interfaces; the QPX1200S has Analogue interfaces only.

USB remote control operates in a similar way to RS232 but via the USB connector. Software supplied with the instrument sets up the controlling computer to treat the USB connection as a virtual COM port. Application software on the computer can then access the instrument via that COM port.

The LAN interface is designed to meet 1.4 LXI (Lan eXtensions for Instrumentation) Core 2011. Remote control using the LAN interface is possible using the TCP/IP Sockets protocol. The instrument also contains a basic Web server which provides information on the unit and allows it to be configured from a web browser. Simple command line control from the browser is also possible.

Analogue remote control is activated from the BUS menu but the functions (V and/or I) and scaling are set from the Extra Functions menu, see previous section.

Bus and Address Selection

Press SHIFT, BUS to display the bus class – **`Digital`** or (**`None`** on QPX1200S) or **`Analogue Remote`**. The present selection is indicated with a ✓. The bus class can be changed directly by keying in the number (0 or 1) beside the class or by moving to the required type using the JOG SET control; the selected bus is indicated by the square brackets [ ]. Press OK to select the bus class. At any time before the OK key is pressed the selection can be exited without change by pressing ESCAPE.

If **`Analogue Remote`** has been selected, pressing OK returns the display to the standard status screen.

If **`Digital`** has been selected, pressing OK changes the display to show the current digital interface **`Address`** and the message **`Set Address with Jog.`** Change the address using the JOG SET control. Press OK to confirm and return to the standard status screen. Setting the address is essential for GPIB operation (optional) but use can be made of the ADDRESS? command over any of the other interfaces to easily identify which instrument is being controlled by a particular COM port (for RS232 or USB) or TCP socket (for LAN). Note that the LAN interface also has a separate 'Identify' function, accessible from the instrument's web pages, that flashes the instrument's display until the function is cancelled.

If analogue is selected then the digital interfaces may be used to query the instrument but not to change any settings.

Interface Locking (QPX1200SP only)

All the remote interfaces are live at all times, to remove any need to select the active interface and to ensure that the LAN interface is always available (as demanded by the LXI standard). To reduce the risk of the instrument being inadvertently under the control of two interfaces at once a simple lock and release mechanism is provided in the instruction set. The lock is automatically released where it is possible to detect disconnection and when the local button is pressed. Access to the interfaces may also be restricted using the web pages.

Any interface may request to have exclusive control of the instrument by sending an “IFLOCK” command. The lock may only be released by sending an “IFUNLOCK” command from the interface instance that currently has the lock and may be queried from any interface by sending an “IFLOCK?” command. The reply to any of these commands will be “-1” if the lock is owned by another interface instance, “0” if the interface is free and “1” if the lock is owned by the requesting interface instance. Sending any command from an interface without control privileges that attempts to change the instrument status will set bit 4 of the Standard Event Status Register and put 200 into the Execution Error Register to indicate that there are not sufficient privileges for the required action.

Note: it is also possible to configure the privileges for a particular interface to either ‘read only’ or ‘no access’ from the Web page interface.

Remote/Local Operation (QPX1200SP only)

At power-on the instrument will be in the local state. In this state all keyboard operations are possible. When the instrument is addressed to listen and a command is received the remote state will be entered and REMOTE will be shown in the top line of the display. In this state the keyboard is locked out and remote commands only will be processed. The instrument may be returned to the local state by pressing the LOCAL key; however, the effect of this action will only remain until the instrument is addressed again or receives another character from the interface, when the remote state will once again be entered.

RS232 Interface (QPX1200SP only)

RS232 Interface Connector

The 9-way D-type serial interface connector is located on the instrument rear panel. The pin connections are as shown below:

Pin	Name	Description
1	RI	Passively asserted (+V through 10kΩ)
2	TXD	Transmitted data from instrument
3	RXD	Received data to instrument
4	CTS	
5	GND	Signal ground
6	RTS	Passively asserted (+V through 10kΩ)
7	DSR	No internal connection
8	DTR	
9	CD	No internal connection

RS232 Connections

The RS232 interface should be connected to a standard PC port using a fully wired 1:1 male-female cable without any cross-over connections. Alternatively, only pins 2, 3 and 5 need be connected to the PC, but with links made in the connector at the PC end between pins 1, 4 and 6 and between pins 7 and 8, see diagram.

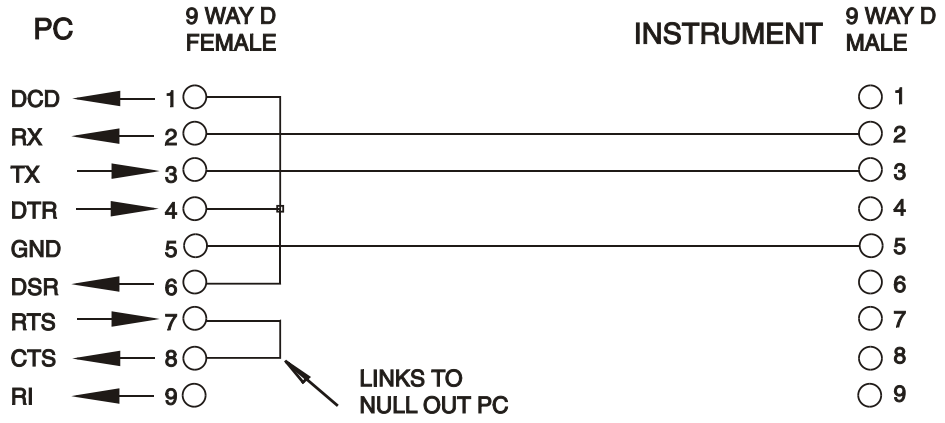

Baud Rate for this instrument is fixed at 9600; the other parameters are fixed as follows:

Start Bits: 1 Parity: None

Data Bits: 8 Stop Bits: 1

RS232 Character Set

Because of the need for XON/XOFF handshake it is possible to send ASCII coded data only; binary blocks are not allowed. Bit 7 of ASCII codes is ignored, i.e. assumed to be low. No distinction is made between upper and lower case characters in command mnemonics and they may be freely mixed. The ASCII codes below 20H (space) are not used. In this manual 20H, etc. means 20 in hexadecimal.

USB Interface & Driver Installation (QPX1200SP only)

The instrument firmware can be updated in the field through the USB port. This does not need the driver described here. It requires a PC software utility provided by the manufacturer, and uses a HID driver that will already be installed on the PC. If that is the only USB functionality required, download the package containing the firmware update together with the PC utility from the manufacturer, and follow the instructions included.

Using the USB interface for remote control requires a Communications Device Class driver on the PC to provide a virtual COM port instance. In Windows a suitable driver is provided by Microsoft, but it is not installed by default. The data (.INF) file to control the installation is provided on the Product Documentation CD delivered with the unit; however the same driver is also used by many other instruments from this manufacturer and may already be known to the PC.

To install the driver for the first time, first switch the unit on, and then connect the USB port to the PC. The Windows plug and play functions should automatically recognise the attachment of new hardware to the USB interface and (possibly after searching the internet for some time) prompt for the location of a suitable driver. Follow the Windows prompts and point to the CD, then the sub-directory for this product, and then to the USB Driver sub-directory below that. The file is named USB_ARM_VCP_xxx.INF, where xxx is a version number. (A readme.pdf file will also be found in that directory if further assistance is needed.)

In some cases Windows will not complete this procedure (especially recent versions which search the internet first, looking for the unique Vendor ID and Product ID), in which case the instrument will show in Device Manager as “not working properly”. If this happens, select this device, right click and choose “update driver software...” and then “browse this computer for driver software...” and then locate the .INF file on the CD as described above.

Once Windows has installed the device driver it will assign a COM port number to this particular unit. This number will depend on previous COM port assignments on this PC, and it may be necessary to use Device Manager to discover it. Each instrument has a unique USB identifier which is remembered by the system, so it will receive the same COM port number whenever it is attached to the same PC (regardless of the physical interface socket used), even though the COM port will disappear while the instrument is disconnected or switched off. Other instruments will receive different COM port numbers.

Note that a different PC will not necessarily assign the same COM port number to a particular instrument (it depends on the history of installations), however Device Manager can be used to change the assignments given.

This virtual COM port can be driven by Windows applications (including a terminal emulator) in exactly the same way as any standard COM port, except that the Baud rate and other settings are unnecessary and are ignored. Some old applications might not function with COM port numbers 3 or 4, or above 9. In this case, use Device Manager to change the allocation given. Once it is installed, the driver will be maintained by Windows Update in the usual way.

LAN Interface (QPX1200SP only)

The LAN interface is designed to comply with 1.4 LXI Core 2011 and contains the interfaces and protocols described below. Since it is possible to misconfigure the LAN interface, making it impossible to communicate with the instrument over LAN, a LAN Configuration Initialise (LCI) mechanism is provided via a recessed switch on the rear panel to reset the unit to the factory default. The default setting is for the instrument to attempt to obtain settings via DHCP if available or, if DHCP times out (30 seconds), via Auto-IP. In the very unlikely event that an Auto-

IP address cannot be found a static IP address of 192.168.0.100 is assigned. Resetting the LAN removes any password protection.

For more information on LXI standards refer to www.lxistandard.org/home .

LAN Connection

To use the LAN interface, the IP address of the unit must be known. . On the supplied CD-ROM is a guide to the LXI Discovery Tool which provides links to the latest version of the tool and associated downloads. The tool is a Windows PC application which can be used to display the IP addresses or host names of all connected devices that comply with the VXI-11 protocol or support multicast Domain Name System (mDNS) records. Connecting via a router is recommended as this is significantly quicker to assign an IP address; connecting directly to the PC will begin to assign an IP address only after a 30 second DHCP timeout. Double clicking on any entry in the list of devices discovered will open the PC's web browser and display the Home page of that device.

There are also tools for LAN discovery included as part of the National Instruments Measurement and Automation Explorer package and the Agilent Vee application.

The unit will, when first powered up, attempt to obtain settings via DHCP if available or, if DHCP times out (30 seconds), via Auto-IP. In the very unlikely event that an Auto-IP address cannot be found a static IP address of 192.168.0.100 is assigned

LAN Status Indication

The LAN Status is displayed in the top left hand corner of the display during normal operation. It is not shown on all menus. There are 4 possible indications:

No LAN	If the unit cannot detect any connection to a LAN e.g. the cable is unplugged then the LAN status indicator is .
Configuring	The unit has detected a LAN connection but is not yet configured, e.g. is waiting for DHCP. The LAN status indicator is animated flashing between and
LAN OK	The LAN connection is now configured and the unit can communicate. The display becomes
LAN FAULT	The unit has detected a problem with LAN connection, e.g. Its IP address is in use by another device. Communication is not possible and the display shows

LAN Identify

The instrument's main web page has an 'Identify' function which allows the user to send an identifying command to the instrument which causes its display to flash until the command is cancelled.

Web Server; Configuration Password Protection

The unit contains a basic web server. This provides information on the instrument and allows it to be configured. The Configure page can be password protected to deter unauthorised changes to the remote operation configuration; the default configuration is ‘no password’.

The Configure page itself explains how to set the password. The password can be up to 15 characters long; note that the **User Name should be left blank**. The password will, however, be reset to the default (no password) if the rear panel LAN RESET switch is used to reset all the LAN parameters to their factory default.

The web pages also have an ‘Identify’ function which allows the user to send an identifying command to the instrument which causes its display to flash until the command is cancelled.

ICMP Ping Server

The unit contains an ICMP server allowing the instrument to be ‘pinged’ via either its host name or IP address.

VXI-11 Discovery Protocol

The instrument has very limited support of VXI-11 which is sufficient for the discovery protocol and no more.

The instrument implements a Sun RPC Port-mapper on TCP port 111 and UDP port 111 as defined in RPC1183. The calls supported are: NULL, GET PORT and DUMP.

On TCP port 1024 a very simple VXI-11 protocol is implemented sufficient only for instrument discovery. This implements the following calls: CREATE LINK, DEVICE_WRITE, DEVICE_READ and DESTROY_LINK.

Once a link has been created anything written to the device is ignored and any read from the device returns the identification string as would be expected from a "*IDN?" of the form

'Manufacturer,Model,Serial No.,X.xx – Y.yy'

for example

THURLBY THANDAR, QPX1200, 279730, 3.00 – 1.00

where 'X.xx' is the revision of the main firmware and 'Y.yy' is the revision of the interface firmware. Interface firmware is user field updateable via the USB port.

mDNS and DNS-SD Support

Multicast DNS provides DNS services even on networks without a central DNS server (or DHCP server). This simplifies the setting up of a simple LAN using meaningful hostnames instead of a raw IP address. With service discovery it becomes straightforward for the device to be discovered and the services it provides.

The services provided by the instrument are http (_http._tcp) and lxi (_lxi._tcp).

VISA Resource Name

Because of the limited support for VXI-11(Discovery Protocol only), the instrument must be referred to by its raw socket information when used in software packages which communicate via a VISA resource name. For example, an instrument at IP address 192.168.1.100 would normally have a VISA resource name of "TCPIP0::192.168.1.100::inst0::INSTR" but for this instrument the name must be modified to read "TCPIP0::192.168.1.100::9221::SOCKET" where 9221 is the TCP port used by this instrument for control and monitoring, see below.

XML Identification Document URL

As required by the LXI standard, the instrument provides an XML identification document that can be queried via a GET at "http://<hostname>:80/lxi/identification" that conforms to the LXI XSD Schema (available at http://www.lxistandard.org/InstrumentIdentification/1.0) and the W3C XML Schema Standards (http://www.w3.org/XML/Schema). This document describes the instrument.

TCP Sockets

The instrument uses 2 sockets on TCP port 9221 for instrument control and monitoring. Text commands are sent to this port as defined in 'Remote Commands' and any replies are returned via the same port. Any string must be one or more complete commands. Commands may be separated with either semicolons ";" or line feeds. No terminator is required since the TCP frame contains complete commands though commands may be sent with a terminator if desired (it will be ignored). Each command over TCP behaves as if it is terminated with a command terminator (ASCII character 0AH, line feed).

GPIB Interface (optional)

The optional GPIB interface 24-way connector is located on the instrument rear panel. The pin connections are as specified in IEEE Std. 488.1-1987 and the instrument complies with IEEE Std. 488.1-1987 and IEEE Std. 488.2-1987.

GPIB Subsets (optional)

This instrument contains the following IEEE 488.1 subsets:

Source Handshake	SH1

Acceptor Handshake	AH1
Talker	T6
Listener	L4
Service Request	SR1
Remote Local	RL2
Parallel Poll	PP1
Device Clear	DC1
Device Trigger	DT0
Controller	C0
Electrical Interface	E2

Query Error Register - GPIB IEEE Std. 488.2 Error Handling

The IEEE 488.2 UNTERMINATED error (addressed to talk with nothing to say) is handled as follows. If the instrument is addressed to talk and the response formatter is inactive and the input queue is empty then the UNTERMINATED error is generated. This will cause the Query Error bit to be set in the Standard Event Status Register, a value of 3 to be placed in the Query Error Register and the parser to be reset. See the Status Reporting section for further information.
The IEEE 488.2 INTERRUPTED error is handled as follows. If the response formatter is waiting to send a response message and a <PROGRAM MESSAGE TERMINATOR> has been read by the parser or the input queue contains more than one END message then the instrument has been INTERRUPTED and an error is generated. This will cause the Query Error bit to be set in the Standard Event Status Register, a value of 1 to be placed in the Query Error Register and the response formatter to be reset thus clearing the output queue. The parser will then start parsing the next <PROGRAM MESSAGE UNIT> from the input queue. See the Status Reporting section for further information.
The IEEE 488.2 DEADLOCK error is handled as follows. If the response formatter is waiting to send a response message and the input queue becomes full then the instrument enters the DEADLOCK state and an error is generated. This will cause the Query Error bit to be set in the Standard Event Status Register, a value of 2 to be placed in the Query Error Register and the response formatter to be reset thus clearing the output queue. The parser will then start parsing the next <PROGRAM MESSAGE UNIT> from the input queue. See the Status Reporting section for further information.

GPIB Parallel Poll (optional)

Complete parallel poll capabilities are offered on this instrument. The Parallel Poll Enable Register is set to specify which bits in the Status Byte Register are to be used to form the ist local message The Parallel Poll Enable Register is set by the *PRE <NRF> command and read by the *PRE? command. The value in the Parallel Poll Enable Register is ANDed with the Status Byte Register; if the result is zero then the value of ist is 0 otherwise the value of ist is 1.

The instrument must also be configured so that the value of ist can be returned to the controller during a parallel poll operation. The instrument is configured by the controller sending a Parallel Poll Configure command (PPC) followed by a Parallel Poll Enable command (PPE). The bits in the PPE command are shown below:

bit 7 =	X	don't care
bit 6 =	1	Parallel poll enable
bit 5 =	1	
bit 4 =	0	
bit 3 =	Sense	sense of the response bit; 0 = low, 1 = high
bit 2 =	?	bit position of the response
bit 1 =	?	
bit 0 =	?	

Example. To return the RQS bit (bit 6 of the Status Byte Register) as a 1 when true and a 0 when false in bit position 1 in response to a parallel poll operation send the following commands

*PRE 64<pmt>, then PPC followed by 69H (PPE)

The parallel poll response from the instrument will then be 00H if RQS is 0 and 01H if RQS is 1.

During parallel poll response the DIO interface lines are resistively terminated (passive termination). This allows multiple devices to share the same response bit position in either wired-AND or wired-OR configuration, see IEEE 488.1 for more information.

Status Reporting (QPX1200SP only)

A separate error and status model is maintained for each interface instance; an interface instance is defined as a potential connection. USB, GPIB (optional) and RS232 are inherently single connections so represent one interface instance each. LAN, however, allows for multiple simultaneous connections and therefore represents multiple interface instances. Two interface instances are allocated to the two TCP socket interfaces and one more is allocated to the Web page interface. Having a separate model for each interface instance ensures that data does not get lost as many commands e.g. '*ESR?' clear the contents on read.

Error status is maintained using a set of registers; these are described in the following paragraphs and shown on the Status Model at the end of this section.

Standard Event Status and Standard Event Status Enable Registers

These two registers are implemented as required by the IEEE Std. 488.2.
Any bits set in the Standard Event Status Register which correspond to bits set in the Standard Event Status Enable Register will cause the ESB bit to be set in the Status Byte Register.

The Standard Event Status Register is read and cleared by the *ESR? command. The Standard Event Status Enable register is set by the *ESE <NRF> command and read by the *ESE? command.

It is a bit field where each bit has the following significance.

Bit 7 - Power On. Set when power is first applied to the instrument.

Bit 6 - Not used.

Bit 5 - Command Error. Set when a syntax type error is detected in a command from the bus. The parser is reset and parsing continues at the next byte in the input stream.

Bit 4 - Execution Error. Set when an error is encountered while attempting to execute a completely parsed command. The appropriate error number will be reported in the Execution Error Register, see Error Messages section.

Bit 3 - Verify Timeout Error. Set when a parameter is set with 'verify' specified and the value is not reached within 5 secs, e.g. output voltage is slowed by a large capacitor on the output.

Bit 2 - Query Error. Set when a query error occurs. The appropriate error number will be reported in the Query Error Register.

Bit 1 - Not used.

Bit 0 - Operation Complete: Set in response to the '*OPC' command.

Execution Error Register

This register contains a number representing the last error encountered over the current interface. The Execution Error Register is read and cleared using the 'EER?' command. On power up this register is set to 0 for all interface instances.

Error messages have the following meaning:

0 No error encountered.

1- 9 Indicates a hardware error has been encountered.

100 The numerical value sent with the command was too big or too small. Includes negative numbers, illegal store numbers, numbers >1 where only 0 and 1 are allowed, etc.

101 A recall of set up data has been requested but the store specified contains corrupted data. This indicates either a hardware fault or a temporary data corruption which can be corrected by writing data to the store again.

102 A recall of set up data has been requested but the store specified does not contain any data.

103 Attempt to read or write a command on the second output. The unit is single output only.

200 Read Only: An attempt has been made to change the instruments settings from an interface without write privileges. See 'Interface Locking' section for details

Limit Event Status and Limit Event Status Enable Registers

These two registers are implemented as an addition to the IEEE Std.488.2. Their purpose is to inform the controller of entry to and/or exit from current or voltage limit conditions and the history of protection trip conditions since the last read.

Any bits set in the Limit Event Status Register which corresponds to bits set in the Limit Event Status Enable Register will cause the LIM1 bit to be set in the Status Byte Register.

The Limit Event Status Register is read and cleared by the LSR1? command. The Limit Event Status Enable Register is set by the LSE1 <NRF> command and read by the LSE1? command.

Bit 7 - Reserved for future use

Bit 6 - Set when a fault trip has occurred which requires AC power OFF/ON to reset.

Bit 5 - Set when an output sense trip has occurred

Bit 4 - Set when an output over current trip has occurred

Bit 3 - Set when an output over voltage trip has occurred

Bit 2 - Set when output enters power limit (unregulated mode)

Bit 1 - Set when output enters current limit (constant current mode)

Bit 0 - Set when output enters voltage limit (constant voltage mode)

Status Byte Register and Service Request Enable Register

These two registers are implemented as required by the IEEE Std. 488.2.
Any bits set in the Status Byte Register which correspond to bits set in the Service Request Enable Register will cause the RQS/MSS bit to be set in the Status Byte Register, thus generating a Service Request on the bus.

The Status Byte Register is read either by the *STB? command, which will return MSS in bit 6, or by a Serial Poll which will return RQS in bit 6. The Service Request Enable register is set by the *SRE <NRF> command and read by the *SRE? command.

Bit 7 - Not used.

Bit 6 - RQS/MSS. This bit, as defined by IEEE Std. 488.2, contains both the Requesting Service message and the Master Status Summary message. RQS is returned in response to a Serial Poll and MSS is returned in response to the *STB? command.

Bit 5 - ESB. The Event Status Bit. This bit is set if any bits set in the Standard Event Status Register correspond to bits set in the Standard Event Status Enable Register.

Bit 4 - MAV. The Message Available Bit. This will be set when the instrument has a response message formatted and ready to send to the controller. The bit will be cleared after the Response Message Terminator has been sent.

Bit 3 - Not used.

Bit 2 - Not used.

Bit 1 - Not used.

Bit 0 - LIM1. This will be set if any bits in the Limit Event Status register are set and corresponding bits are set in the Limit Event Status Enable register.

Power on Settings

The following instrument status values are set at power on:

Status Byte Register	= 0
Service Request Enable Register †	= 0
Standard Event Status Register	= 128 (pon bit set)
Standard Event Status Enable Register †	= 0
Execution Error Register	= 0
Query Error Register	= 0
Parallel Poll Enable Register †	= 0

† Registers marked thus are specific to the optional GPIB section of the instrument and are of limited use in an RS232 environment.

The instrument will be in local state with the keyboard active.

The instrument parameters at power on are the same as at last switch off with the exception of the output status. By default this is always off at power on but the user may change this to the same at power on as at switch off.

Status Model

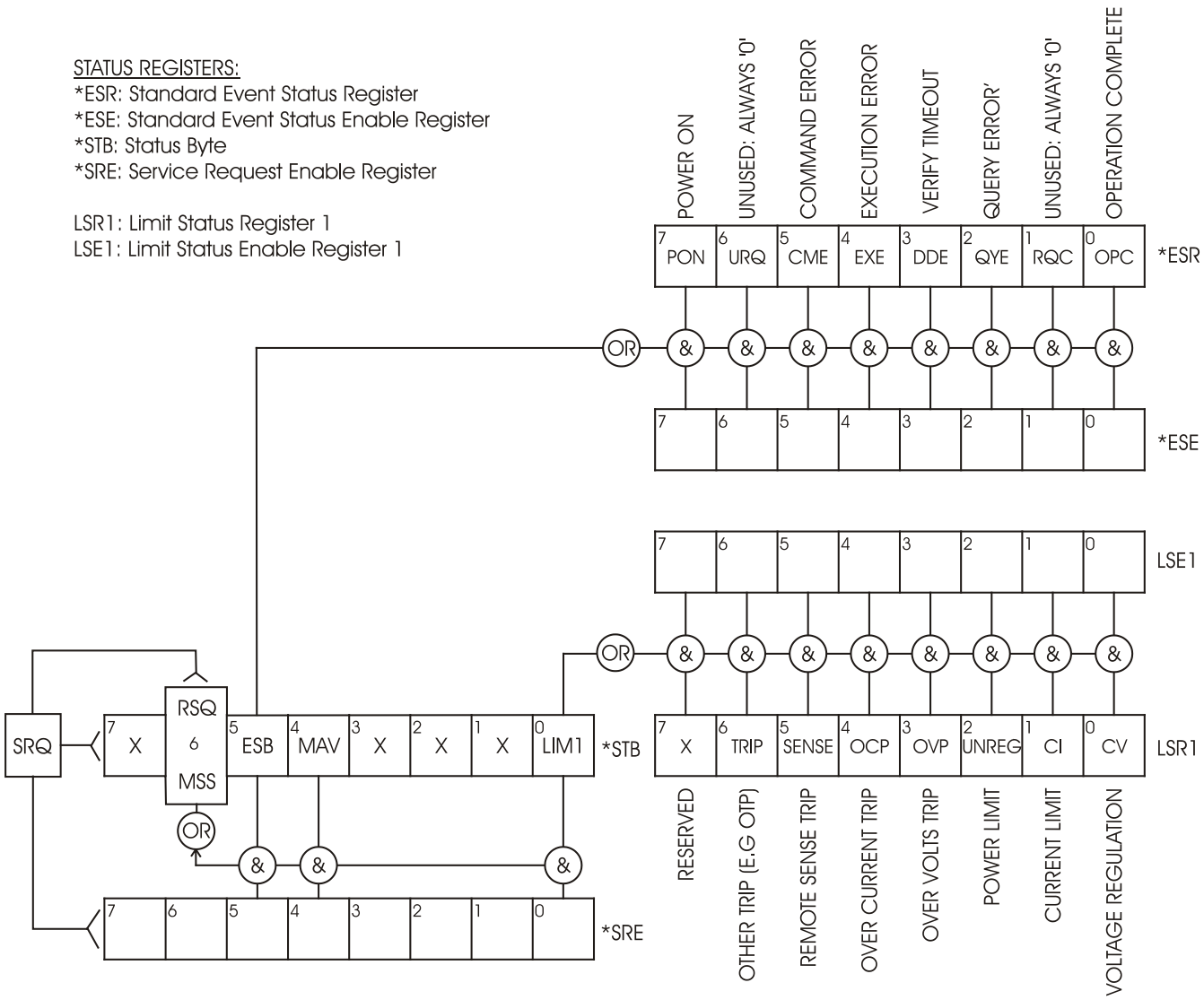

Remote Command Format

RS232 input to the instrument is buffered in a 256 byte input queue which is filled, under interrupt, in a manner transparent to all other instrument operations. The instrument will send XOFF when approximately 200 characters are in the queue. XON will be sent when approximately 100 free spaces become available in the queue after XOFF was sent. This queue contains raw (un-parsed) data which is taken, by the parser, as required. Commands (and queries) are executed in order and the parser will not start a new command until any previous command or query is complete. RS232 responses to commands or queries are sent immediately; there is no output queue.

USB input conforms with USB 2.0 Full Speed.

LAN input to the instrument is buffered in a 1500 byte input queue which is filled, under interrupt, in a manner transparent to all other instrument operations. LAN interface conforms with 1.4 LXI (LAN eXtensions for Instrumentation) Core 2011.

Commands must be sent as specified in the commands list and must be terminated with the command terminator code 0AH (Line Feed, LF). Commands may be sent in groups with individual commands separated from each other by the code 3BH (;). The group must be terminated with command terminator 0AH (Line Feed, LF).

Responses from the instrument to the controller are sent as specified in the commands list. Each response is terminated by a <RESPONSE MESSAGE TERMINATOR> which is 0DH (Carriage Return, CR) followed by 0AH (Line Feed, LF).

<WHITE SPACE> is defined as character codes 00H to 20H inclusive.

<WHITE SPACE> is ignored except in command identifiers. e.g. '*C LS' is not equivalent to '*CLS'.

The high bit of all characters is ignored. The commands are case insensitive.

GPIB Remote Command Formats (optional)

Optional GPIB input to the instrument is buffered in a 256-byte input queue which is filled, under interrupt, in a manner transparent to all other instrument operations. The queue contains raw (un-parsed) data, which is taken, by the parser, as required. Commands (and queries) are executed in order and the parser will not start a new command until any previous command or query is complete. There is no output queue which means that the response formatter will wait, indefinitely, if necessary, until the instrument is addressed to talk and the complete response message has been sent, before the parser is allowed to start the next command in the input queue.

Commands are sent as <PROGRAM MESSAGES> by the controller, each message consisting of zero or more <PROGRAM MESSAGE UNIT> elements separated by <PROGRAM MESSAGE UNIT SEPARATOR> elements.

A <PROGRAM MESSAGE UNIT> is any of the commands in the remote commands list.

A <PROGRAM MESSAGE UNIT SEPARATOR> is the semi-colon character ';' (3BH).

<PROGRAM MESSAGES> are separated by <PROGRAM MESSAGE TERMINATOR> elements which may be any of the following:

NL	The new line character (0AH)
NL^END	The new line character with the END message
^END	The END message with the last character of the message

Responses from the instrument to the controller are sent as <RESPONSE MESSAGES>. A <RESPONSE MESSAGE> consists of one <RESPONSE MESSAGE UNIT> followed by a <RESPONSE MESSAGE TERMINATOR>.

A <RESPONSE MESSAGE TERMINATOR> is the new line character with the END message NL^END.

Each query produces a specific <RESPONSE MESSAGE> which is listed along with the command in the remote commands list.

<WHITE SPACE> is ignored except in command identifiers. e.g. '*C LS' is not equivalent to '*CLS'. <WHITE SPACE> is defined as character codes 00H to 20H inclusive with the exception of the NL character (0AH).
The high bit of all characters is ignored.
The commands are case insensitive.

Command List

This section lists all commands and queries implemented in this instrument. The commands are listed in alphabetical order within the function groups.

Note that there are no dependent parameters, coupled parameters, overlapping commands, expression program data elements or compound command program headers; each command is completely executed before the next command is started. All commands are sequential and the operation complete message is generated immediately after execution in all cases.

The following nomenclature is used:

<RMT>	<RESPONSE MESSAGE TERMINATOR>
<NRF>	A number in any format. e.g. 12, 12·00, 1·2e1 and 120e-1 are all accepted as the number 12. Any number, when received, is converted to the required precision consistent with the use then rounded up to obtain the value of the command.
<NR1>	A number with no fractional part, i.e. an integer.
<NR2>	A number in fixed point format e.g. 11·52, 0·78 etc.
<CPD>	<CHARACTER PROGRAM DATA>
<CRD>	<CHARACTER RESPONSE DATA>

Instrument Specific Commands

For commands specified as 'WITH VERIFY' the operation is completed when the parameter being adjusted reaches the required value to within ±5% or ±10 counts, whichever is the greater. If the value fails to settle within these limits within 5 seconds then the Verify Timeout bit (bit 3) is set in the Standard Event Status Register and the operation is completed at the end of the timeout period.

The Operation Complete bit (bit 0) in the Standard Event Status Register is only ever set by the *OPC command. The *OPC (or the *OPC?) command can be used for device synchronisation due to the sequential nature of remote operations.

V1 <NRF>	Set the output to <NRF> Volts.
V1V <NRF>	Set the output to <NRF> Volts with verify.
OVP1 <NRF>	Set the output over voltage protection trip point to <NRF> Volts.
I1 <NRF>	Set the output current limit to <NRF> Amps.
OCP1 <NRF>	Set the output over current protection trip point to <NRF> Amps.
DAMPING1 <NRF>	Set the current meter measurement averaging (I_{AVG}) where <NRF> has the following meaning: 0=OFF, 1=ON.
V1?	Return the set voltage – response is V1 <NR2><RMT> where <NR2> is in Volts.
I1?	Return the set current limit – response is I1 <NR2><RMT> where <NR2> is in Amps.
OVP1?	Return the voltage trip setting – response is VP1 <NR2><RMT> where <NR2> is in Volts.
OCP1?	Return the current trip setting – response is CP1 <NR2><RMT> where <NR2>

	is in Amps.
V1O?	Return the output readback voltage – response is <NR2>V<RMT> where <NR2> is in Volts.
I1O?	Return the output readback current – response is <NR2>A<RMT> where <NR2> is in Amps.
DELTAV1 <NRF>	Set the output voltage step size to <NRF> Volts.
DELTAI1 <NRF>	Set the output current step size to <NRF> Amps.
DELTAV1?	Return the output voltage step size – response is DELTAV1 <NR2><RMT> where <NR2> is in Volts.
DELTAI1?	Return the output current step size – response is DELTAI1 <NR2><RMT> where <NR2> is in Amps.
INCV1	Increment the output voltage by step size.
INCV1V	Increment the output voltage by step size with verify.
DECV1	Decrement the output voltage by step size.
DECV1V	Decrement output voltage by step size with verify.
INCI1	Increment the output current limit by step size.
DECI1	Decrement the output current limit by step size.
OP1 <NRF>	Set output on/off where <NRF> has the following meaning: 0=OFF, 1=ON.
OP1?	Returns output on/off status. The response is <NR1><RMT> where 1 = ON, 0 = OFF.
OPALL <NRF>	Set all outputs on/off where <NRF> has the following meaning: 0=OFF, 1=ON. In this instrument it has the same action as OP1 <NRF>.
SENSE1 <NRF>	Set output sense mode where <NRF> has the following meaning: 0=local, 1=remote.
SAV1 <NRF>	Save the current PSU set up to the set-up store specified by <NRF> where <NRF> can be 0-9.
RCL1 <NRF>	Recall a set up for the PSU from the set-up store specified by <NRF> where <NRF> can be 0-9.
CONFIG?	Returns the Instrument Configuration. This is always 1<RMT> (single output)

System and Status Commands

*CLS	Clear Status. Clears the status structure and, indirectly, the status byte register.
*ESE <NRF>	Set Event Status Enable Register to the value <NRF>
*ESE?	Report value of Event Status Enable Register
*ESR?	Query and clear the Event Status Register. The response format is <NR1><RMT>. See Status Reporting section for details of the response.
*IST?	Returns **ist** local message as defined by IEEE Std. 488.2. The syntax of the response is 0<RMT>, if the local message is false, or 1<RMT>, if the local message is true.
*OPC	Sets the Operation Complete bit (bit 0) in the Standard Event Status Register. This will happen immediately the command is executed because of the sequential nature of all operations.
*OPC?	Query Operation Complete status. The response is always 1<RMT> and will be available immediately the command is executed because all commands are

	sequential.
*PRE <NRF>	Set the Parallel Poll Enable Register to the value <NRF>.
*PRE?	Returns the value in the Parallel Poll Enable Register in <NR1> numeric format. The syntax of the response is <NR1><RMT>
*SRE <NRF>	Sets the Service Request Enable Register to <NRF>
*SRE?	Report the value in the Service Request Enable Register. Response is <NR1>.
*STB?	Report the value of the Status byte. Response is <NR1>.
*WAI	Wait for Operation Complete true. This command does nothing because all operations are sequential.
*RST	Resets the instrument to the factory default settings – with the exception of all remote interface settings. See Factory Default Settings section.
TRIPRST	Attempt to clear all trip conditions.
EER?	Query and clear the Execution Error Register. The response format is <NR1><RMT>. See Error Reporting section for details of the response.
LSR1?	Query and clear the Limit Status Register. The response format is <NR1><RMT>. See Status Reporting section for details of the response.
LSE1 <NRF>	Set the Limit Status Enable Register to <NRF>
LSE1?	Returns the value in the value in the Limit Status Enable register. Response <NR1><RMT>.
QER?	Query and clear Query Error Register. The response format is nr1<RMT>

Interface Management Commands

LOCAL	Go to local. Any subsequent command will restore the remote state.
LOCALLOCKOUT <NRF>	Sets the keyboard status where <NRF> has the following meaning: 1 = keyboard locked, 0 = keyboard active. Note that this command only affects the keyboard, not the other interfaces; if required, use IFLOCK to disable the other interfaces. Note: for units with main firmware prior to 4.22 this command is not recognised and returns an error
IFLOCK	Request Instrument 'lock'. This command requests exclusive access control of the instrument. The response is '1' is successful or '-1' if the lock is un-available either because it is already in use or the user has disabled this interface from taking control using the web interface
IFLOCK?	Query the status of the interface 'lock'. The return value is '1' if the lock is owned by the requesting interface instance; '0' if there is no active lock or '-1' if the lock is unavailable either because it is in use by another interface or the user has disabled the interface from taking control via the web interface.
IFUNLOCK	Release the 'lock' if possible. Returns '0' if successful. If this command is unsuccessful '-1' is returned, 200 is placed in the Execution Error Register and bit 4 of the Event Status Register is set indicating that you do not have the authority to release the lock.
ADDRESS?	Returns the bus address <NR1><RMT>. This number can be used to identify the unit
IPADDR?	Returns the present IP address of the LAN interface, provided it is connected. If it is not connected, the response will be the static IP if configured to always use that static IP, otherwise it will be 0.0.0.0 if waiting for DHCP or Auto-IP. The response is nnn.nnn.nnn.nnn<RMT>, where each nnn is 0 to 255.

NETMASK?	Returns the present netmask of the LAN interface, provided it is connected. The response is nnn.nnn.nnn.nnn<RMT>, where each nnn is 0 to 255.
NETCONFIG?	Returns the first means by which an IP address will be sought. The response is <CRD><RMT> where <CRD> is DHCP, AUTO or STATIC.

The following commands specify the parameters to be used by the LAN interface. **Note:** a power cycle is required after these commands are sent before the new settings are used (or returned in response to the queries listed above). The instrument does not attempt to check the validity of the IP address or netmask in any way other than checking that each part fits in 8 bits. The rear panel LAN RESET switch will override these commands and restore the defaults as described earlier.

NETCONFIG <CPD>	Specifies the means by which an IP address will be sought. <CPD> must be one of DHCP, AUTO or STATIC.
IPADDR <quad>	Sets the potential static IP address of the LAN interface (as on the webpage). The parameter must be strictly a dotted quad for the IP address, with each address part an <NR1> in the range 0 to 255, (e.g. 192.168.1.101).
NETMASK <quad>	Sets the netmask to accompany the static IP address of the LAN interface. The parameter must be strictly a dotted quad for the netmask, with each part an <NR1> in the range 0 to 255, (e.g. 255.255.255.0).

Miscellaneous Commands

*IDN?	Returns the instrument identification. The exact response is determined by the instrument configuration and is of the form <NAME>,<model>, 0, <version><RMT> where <NAME> is the manufacturer's name, <model> defines the type of instrument and <version> is the revision level of the software installed.
*TST?	The PSU has no self-test capability and the response is always 0 <RMT>.
*TRG	The PSU has no trigger capability. The command is ignored in this instrument.

Calibration Specific Commands

See Service Manual for details of calibration specific commands.

Note: The use of '1' in many of the commands (e.g. V1 <NRF>, I1O?) is to keep the commands entirely compatible with those for multi-output TTi programmable power supplies. '1' refers to 'Output 1' which, for this power supply, is the only output; a dual output supply, for example, would have a duplicate set of commands V2 <NRF>, I2O?, etc.

The Manufacturers or their agents overseas will provide a repair service for any unit developing a fault. Where owners wish to undertake their own maintenance work, this should only be done by skilled personnel in conjunction with the service manual which may be purchased directly from the Manufacturers or their agents overseas.

Fuse

The correct fuse type is:

15 Amp 250V HBC time-lag, 1¼" x ¼"

Make sure that only fuses of the required rated current and specified type are used for replacement. The use of makeshift fuses and the short-circuiting of fuse-holders is prohibited.

To replace the fuse, first disconnect the instrument from the AC supply. Remove the 6 cover securing screws and lift off the cover. Replace the fuse with one of the correct type and refit the cover.

Note that the main function of the fuse is to make the instrument safe and limit damage in the event of failure of one of the switching devices. If a fuse fails it is therefore very likely that the replacement will also blow, because the supply has developed a fault; in such circumstances the instrument will need to be returned to the manufacturer for service.

Cleaning

If the instrument requires cleaning use a cloth that is only lightly dampened with water or a mild detergent.

WARNING! TO AVOID ELECTRIC SHOCK, OR DAMAGE TO THE INSTRUMENT, NEVER ALLOW WATER TO GET INSIDE THE CASE. TO AVOID DAMAGE TO THE CASE NEVER CLEAN WITH SOLVENTS.

Web link

For the latest version of this instruction manual, IVI driver and any applicable firmware updates go to http://www.aimtti.com/support.



Thurlby Thandar Instruments Ltd.

Glebe Road • Huntingdon • Cambridgeshire • PE29 7DR • England (United Kingdom)

Telephone: +44 (0)1480 412451 • Fax: +44 (0)1480 450409

International web site: www.aimtti.com • UK web site: www.aimtti.co.uk

Email: info@aimtti.com