SINGLE SUBBASES
with **side** ports / **bottom** ports
METALLIC JOINABLE SUBBASES
with **bottom** ports

Series **355**
Type
ISO sizes 1-2-3

SPECIFICATIONS

description			port connection				size	catalogue number
type of subbase	type of port		12-14	1	2-4	3-5		
single subbases ISO 5599/1 AFNOR NFE 49080	side 	tapped	G 1/8	G 1/4	G 1/4	G 1/4	**ISO 1**	**35500076**
			G 1/8	G 1/4	G 1/4	G 3/8		**35500061**
			G 1/8	G 3/8	G 3/8	G 3/8		**35500382**
			G 1/8	G 3/8	G 3/8	G 3/8	**ISO 2**	**35500560**
			G 1/8	G 1/2	G 1/2	G 1/2		**35500562**
			G 1/8	G 1/2	G 1/2	G 1/2	**ISO 3**	**35500171**
			G 1/8	G 3/4	G 3/4	G 3/4		**35500192**
	bottom 	tapped	G 1/8	G 1/4	G 1/4	G 1/4	**ISO 1**	**35500077**
			G 1/8	G 3/8	G 3/8	G 3/8	**ISO 2**	**35500085**
		with couplers	Ø 4 mm	for OD Ø 8 mm		G 1/4	**ISO 1**	**35500069**
joinable subbases ISO 5599/1 VDMA 24345	bottom 	subbase	G 1/8	-	G 1/4	-	**ISO 1**	**35500165**
		set of 2 end plates	-	G 3/8	-	G 3/8		**35500166**
		subbase	G 1/8	-	G 3/8	-	**ISO 2**	**35500169**
		set of 2 end plates	-	G 1/2	-	G 1/2		**35500170**
		subbase	G 1/8		G 1/2		**ISO 3**	**35500173**
		set of 2 end plates	-	G 1	-	G 1		**35500174**
		set of 3 plugs on main pressure (1) and exhausts (3-5) for 2 different pressure supplies (see A)					**ISO 1**	**88135521**
							ISO 2	**88135522**
							ISO 3	**88135520**

Set of 2 end plates supplied with 3 plugs (for 1-3-5)

(A) Mounting principle of a plug set : this device allows joinable subbases to be supplied with 2 different pressure inlets.

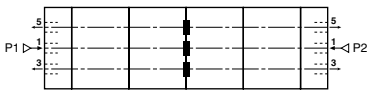

SET OF TRANSFER PLATES AND CONNECTIONS

- **Set of transfer plates and connections to put together different sizes of ISO - VDMA joinable subbases :**

ISO 1 - ISO 2, set including :
- A transfer module to allow connection of ISO-VDMA joinable subbases through ISO 1 and ISO 2 **bottom** ports, and connection of supply pressure (1) and exhausts (3-5) through the unit.
- One end plate ISO 1 (ports 1 - 3 - 5)
- One end plate ISO 2 (ports 1 - 3 - 5)

ISO 1 - ISO 3 set including the same parts as mentionned above, but adapted to the connection of ISO 1 and ISO 3

description	type	catalogue number	E (mm)	
Set of transfer plate and connections for ISO/VDMA joinable subbases with **bottom** ports	**ISO 1 - ISO 2**	**35500199**	20	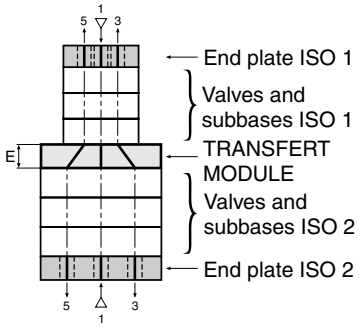
	ISO 1 - ISO 3	**35500194**	32	

00305GB-2017/R01
Availability, design and specifications are subject to change without notice. All rights reserved.

DIMENSIONS (mm), WEIGHT (kg)

VALVES ON **SINGLE** SUBBASES
Side port **- ISO 1**

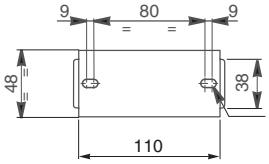

Mounting 2 holes Ø 5,5
counter-bored Ø 14

541 Series

With pilots 189

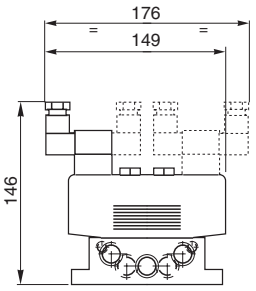

With pilots 190

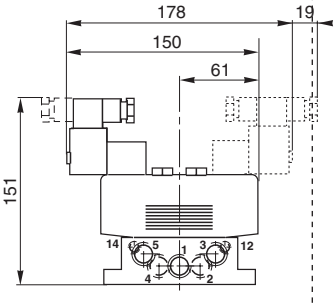

503 Series

With M12 connection

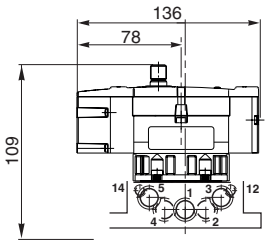

subbase catalogue number	port connection		
	12-14	1-2-4	3-5
35500076	G 1/8	G 1/4	G 1/4
35500061			G 3/8
35500382		G 3/8	G 3/8

total weight					
with 1 pilot			with 2 pilots		
189	190	M12	189	190	M12
0,725	0,785	0,665?	0,825	0,945	0,695?

542 VALVES ON **SINGLE** SUBBASES
Side port **- ISO 2**

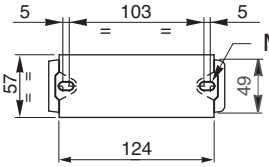

Mounting 2 holes Ø 5,5

With pilots 189

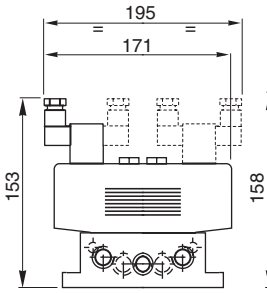

With pilots 190

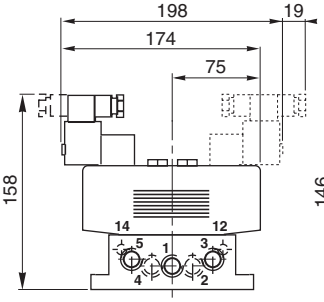

With M12 connection

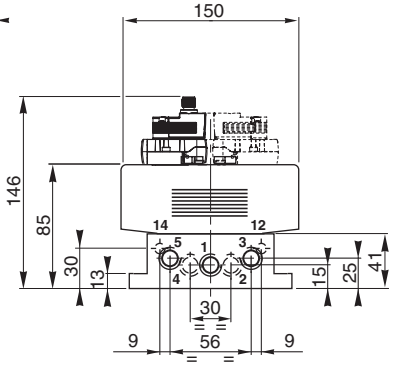

subbase catalogue number	port connection		
	12-14	1-2-4	3-5
35500560	G 1/8	G 3/8	G 3/8
35500562		G 1/2	G 1/2

total weight					
with 1 pilot			with 2 pilots		
189	190	M12	189	190	M12
0,950	1,010	0,930	1,080	1,200	0,980

543 VALVES ON **SINGLE** SUBBASES
Side port **- ISO 3**

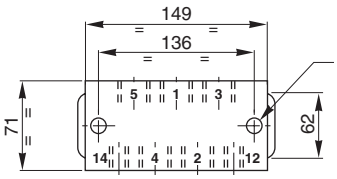

Mounting 2 holes Ø 6,6

With pilots 189

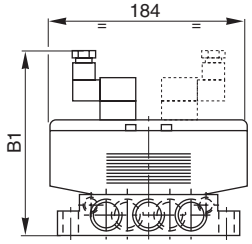

With pilots 190

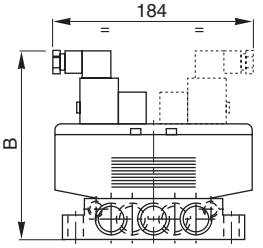

With M12 connection

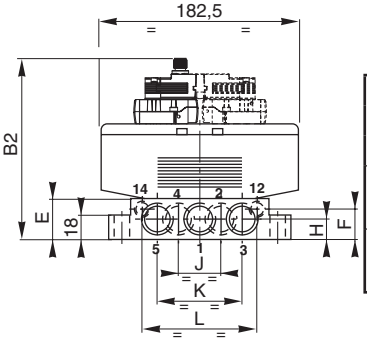

subbase catalogue number	port connection		
	12-14	1-2-4	3-5
35500171	G 1/8	G 1/2	G 1/2
35500192		G 3/4	G 3/4

G	total weight					
	with 1 pilot			with 2 pilots		
	189	190	M12	189	190	M12
1/2	1,585	1,645	1,540	1,685	1,800	1,585
3/4	2,652	2,127	2,022	2,167	2,282	2,067

	B	B1	B2	E	F	H	J	K	L
G 1/2	164	159,5	152	32	22	17	32	68	90
G 3/4	182	177,5	170	50	40	20	36	80	92

00305GB-2017/R01
Availability, design and specifications are subject to change without notice. All rights reserved.

DIMENSIONS (mm), **WEIGHT** (kg)

VALVES ON **SINGLE** SUBBASES
Bottom port **- ISO 1**

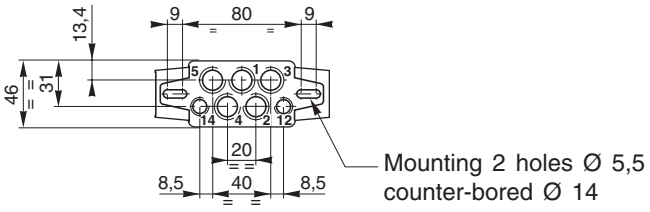

541 Series

With pilots 189

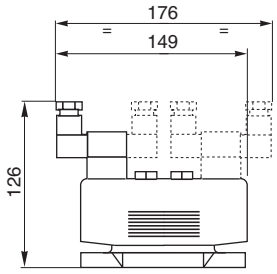

With pilots 190

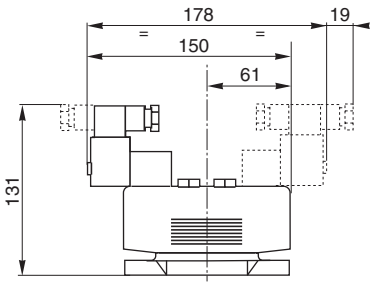

503 Series

With M12 connection

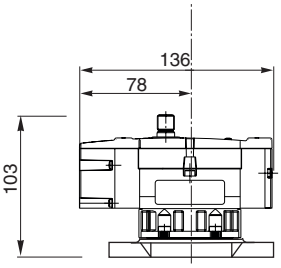

subbase catalogue number	port connection		
	12-14	1-2-4	3-5
35500077	G 1/8	G 1/4	G 1/4
35500069	Instant fittings		G 1/4
	Ø 4 OD	Ø 8 OD	

total weight					
with 1 pilot			with 2 pilots		
189	190	M12	189	190	M12
0,720	0,780	0,660	0,820	0,940	0,690

542 VALVES ON **SINGLE** SUBBASES
Bottom port **- ISO 2**

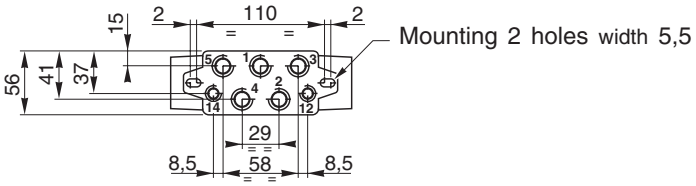

With pilots 189

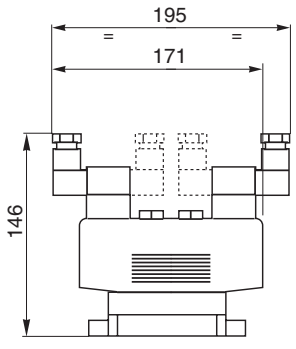

With pilots 190

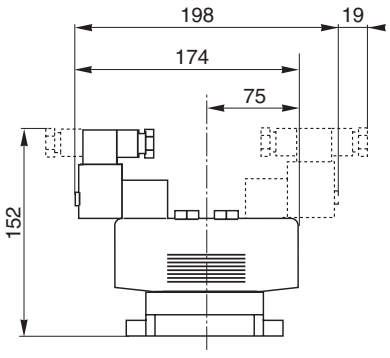

With M12 connection

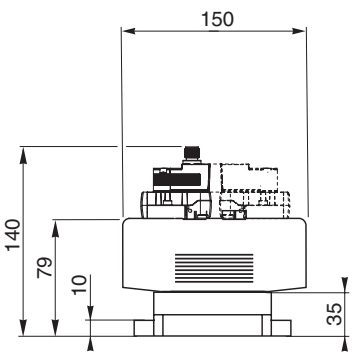

subbase catalogue number	port connection		
	12-14	1-2-4	3-5
35500085	G 1/8	G 3/8	G 3/8

total weight					
with 1 pilot			with 2 pilots		
189	190	M12	189	190	M12
0,670	0,730	0,650	0,800	0,920	0,700

00305GB-2017/R01
Availability, design and specifications are subject to change without notice. All rights reserved.

DIMENSIONS (mm), WEIGHT (kg)

SPOOL VALVES ON **METALLIC JOINABLE SUBBASES**
Bottom port - **ISO 1**

number of subbases	A	B±1	C	weight		
				valves with 2 pilots + subbases + end plates		
				pilot 189	pilot 190	M12
3	173	150	86	2,850	3,200	2,450
4	216	193	129	3,500	4,000	3,000
5	259	236	172	4,100	4,700	3,450
6	302	279	215	4,750	5,500	4,000
7	345	322	258	5,350	6,200	4,450
8	388	365	301	6,000	7,000	5,000

Pilots weight : 1 x 189 = 0,120 kg - 1 x 190 = 0,180 kg
1 x M12 = 0,058 kg - 2 x M12 = 0,110 kg

	code	port connection		
		12-14	2-4	1-3-5
subbase	**35500165**	G 1/8	G 1/4	-
2 end plates	**35500166**	-	-	G 3/8

Set of end plates supplied with 3 plugs G 3/8 (for 1-3-5)

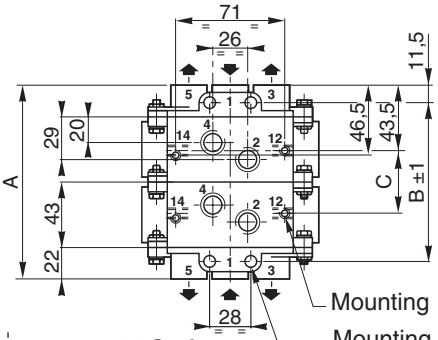

541 Series

With pilots 189

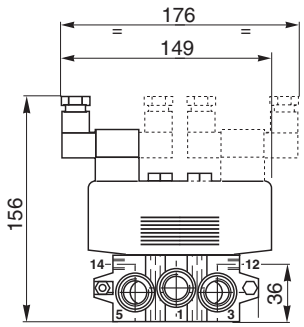

With pilots 190

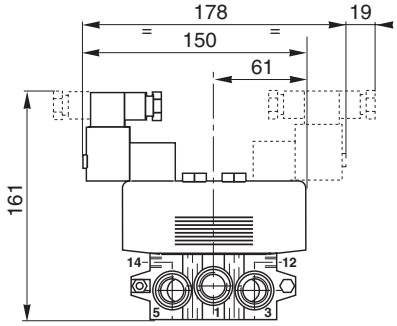

503 Series

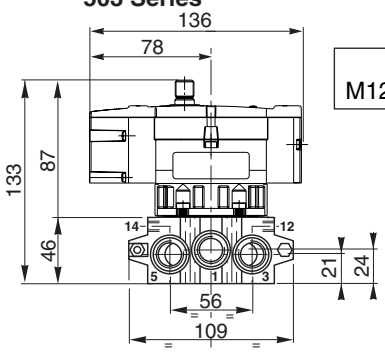

542 SPOOL VALVES ON **METALLIC JOINABLE SUBBASES**
Bottom port - **ISO 2**

number of subbases	A	B±1	C	weight		
				valves with 2 pilots + subbases + end plates		
				pilot 189	pilot 190	M12
3	220	193	112	3,600	3,900	3,240
4	276	249	168	4,600	5,100	4,220
5	332	305	224	5,700	6,300	5,200
6	388	361	280	6,800	7,500	6,180
7	444	417	336	7,800	8,700	7,160
8	500	473	392	9,000	9,900	8,140

Pilot weight : 1 x 189 = 0,120 kg - 1 x 190 = 0,180 kg
1 x M12 = 0,073 kg - 2 x M12 = 0,140 kg

	catalogue number	port connection		
		12-14	2-4	1-3-5
subbase	**35500169**	G 1/8	G 3/8	-
2 end plates	**35500170**	-	-	G 1/2

Set of end plates supplied with 3 plugs G 1/2 (for 1-3-5)

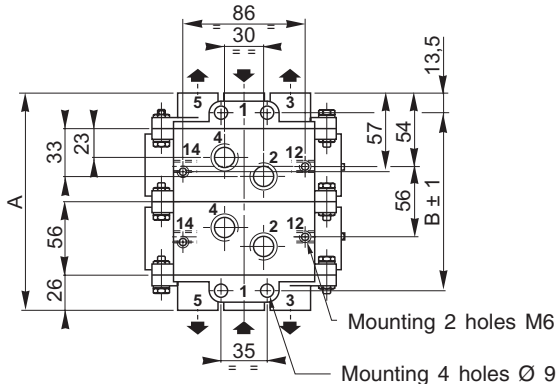

With pilots 189

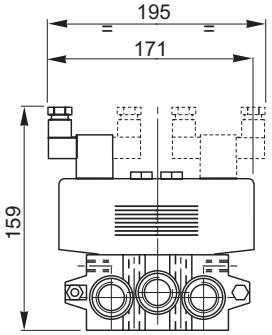

With pilots 190

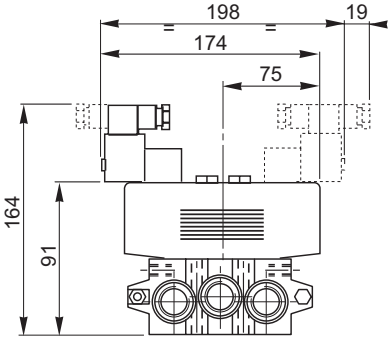

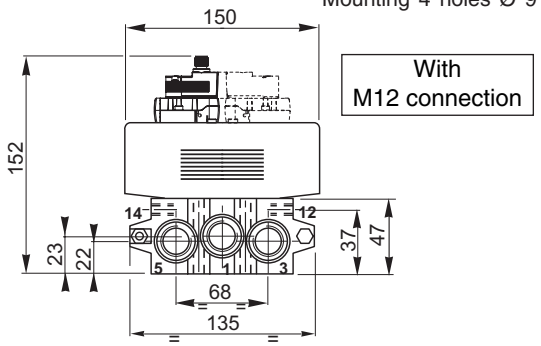

00305GB-2017/R01
Availability, design and specifications are subject to change without notice. All rights reserved.

DIMENSIONS (mm), **WEIGHT** (kg)

543 SPOOL VALVES ON **METALLIC JOINABLE SUBBASES**
Bottom port - **ISO 3**

	catalogue number	port connection		
		12-14	2-4	1-3-5
subbase	**35500173**	G 1/8	G 1/2	-
2 end plates	**35500174**	-	-	G 1

Set of end plates supplied with 3 plugs G 3/8 (for 1-3-5)

number of subbases	A	B±1	C	weight		
				valves with 2 pilots + subbases + end plates		
				pilot 189	pilot 190	M12
2	206	167	71	4,140	4,260	3,820
3	277	238	142	5,740	5,860	5,200
4	348	309	213	7,340	7,460	6,580
5	419	380	284	8,940	9,060	7,960
6	490	451	355	10,540	10,660	9,120
7	561	522	426	12,140	12,140	10,380

Pilots weight : 1 x 189 = 0,120 kg - 1 x 190 = 0,180 kg
1 x M12 = 0,073 kg - 2 x M12 = 0,141 kg

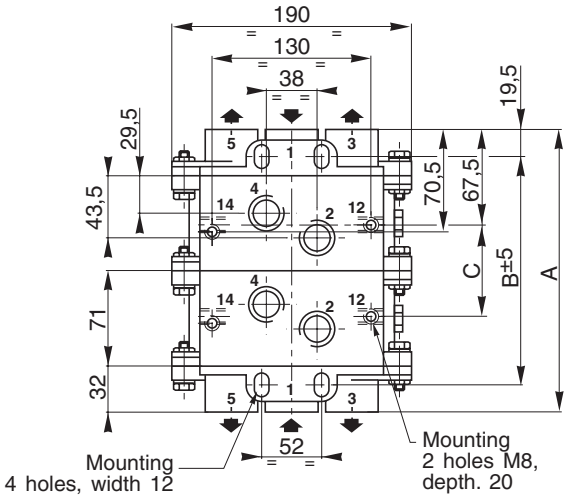

With pilots 189

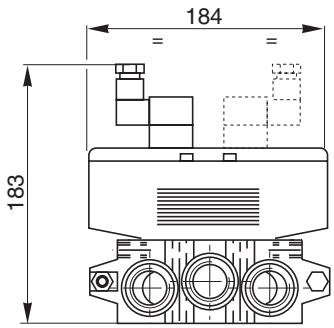

With pilots 190

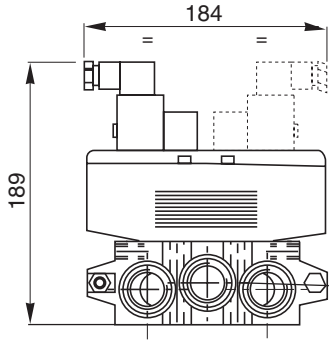

With M12 connection

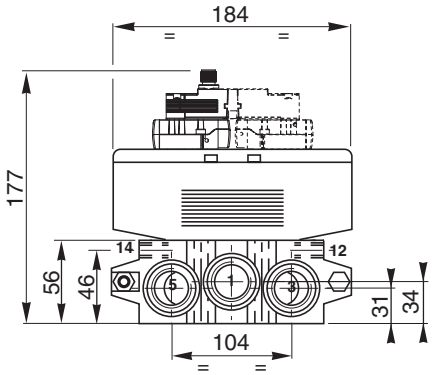

00305GB-2017/R01
Availability, design and specifications are subject to change without notice. All rights reserved.

METALLIC JOINABLE SUBBASES

side ports G 1/4

5/2-5/3
Series
355
Type
ISO sizes 1 and 2

GENERAL

This subbase system comprises joinable subbases and accessories with 3 principal characteristics.

- The equipment has a **standard** interface complying with the international standard ISO 5599/1 - Size 1, so that spool valves series 541 can be fitted.
- Subbases for **side ports**.
- The subbases are fitted with selector plates which mean that various piping arrangements and inter-connections can be selected.

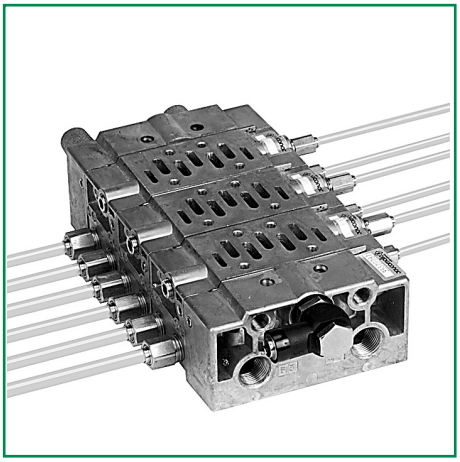

CONNECTION POSSIBILITIES

These joinable subbases with side ports offer many advantages:

- Various piping possibilities due to a large number of port connections.
- Simple assembly in panels due to an improved accessibility to the ports.
- Simple maintenance.
- A reduction in costs due to the removal of pivoting mounting chassis and a reduction in the number of fittings.
- Possibility of mounting directly onto the body of the machine.
- A reduction in lengths of tube giving improved flow rates and improved response times.

These bases allow piping to outlet ports (2, 4) and pilot ports (12, 14) on both side faces, as shown below.

The end plates allow the piping of the supply (1) and exhausts (3,5), in addition, the pilots (12,14) can be piped into the end plates.

CONNECTION THROUGH THE END PLATES

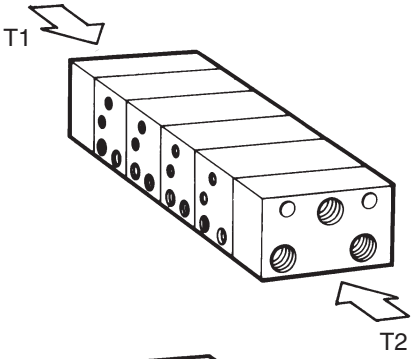

SAMPLE PIPING ARRANGEMENTS

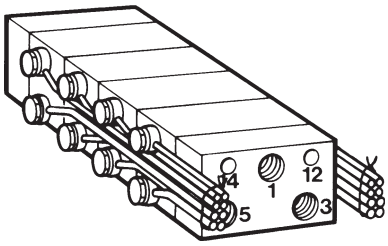

This arrangements allows the use of rotatable fitting

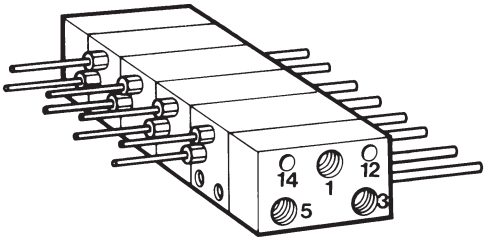

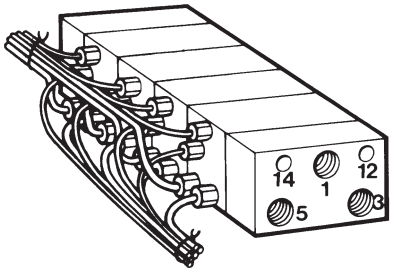

POSSIBLE FLOW PATHS

The subbases include 5 flow paths (1-3-5-12-14), all of which can be connected through the end plates of each manifold assembly.

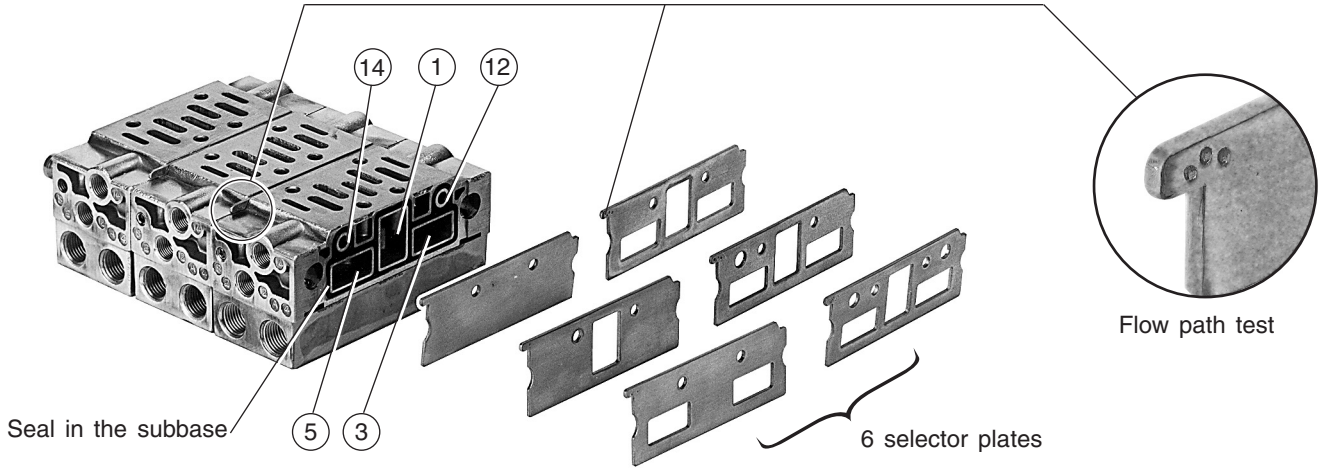

00305GB-2017/R01
Availability, design and specifications are subject to change without notice. All rights reserved.

POSSIBLE FLOW PATHS

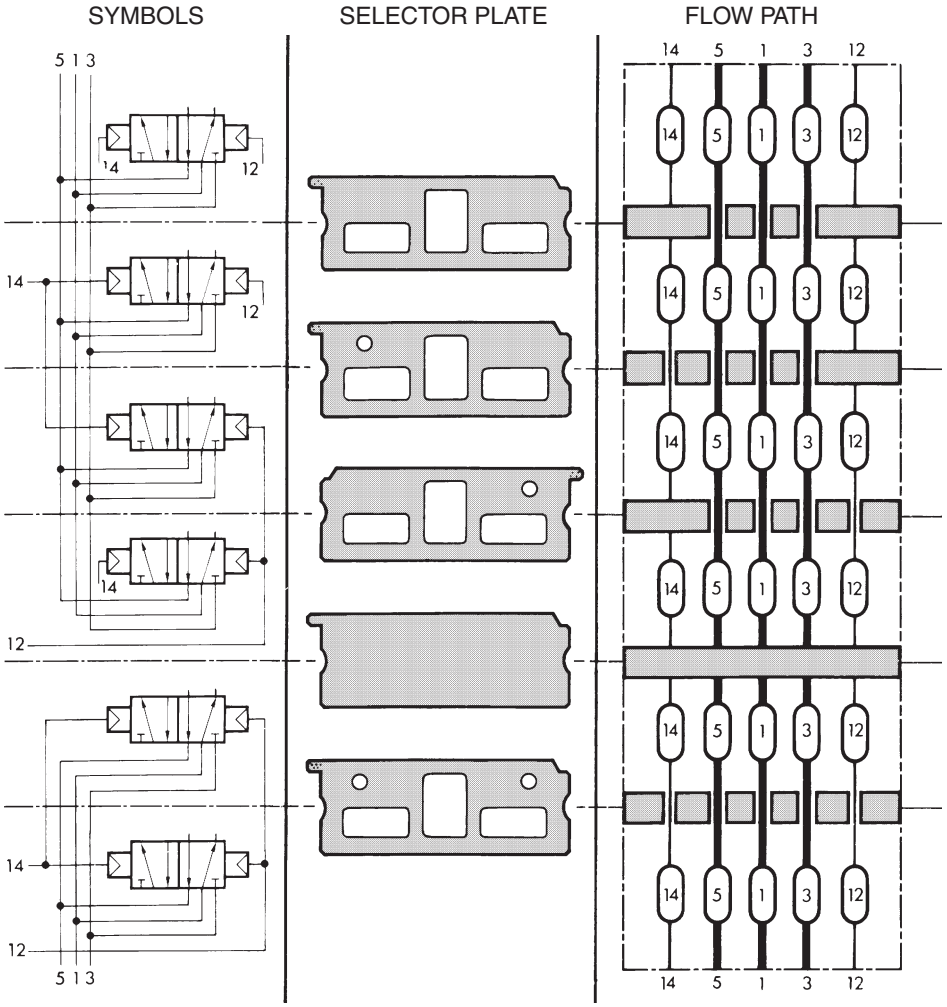

The pilots are piped separately to each subbase (plate 1-3-5 supplied with each subbase).

Pilot on side 14 is connected between 2 or more subbases.

Return on side 12 is connected between 2 or more subbases (uses the same plate as the one above).

Blanking plate (allows a manifold to be used with 2 different supply pressures).

Allows the inter-connection of both pilots 12, 14 between 2 or more valves.

PIPING OF SUPPLY AND EXHAUSTS TO THE END COVERS

STANDARD ASSEMBLY
Supply and exhausts to 1 side plate.

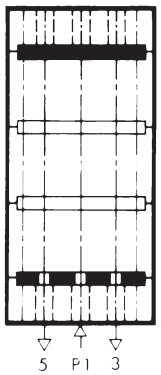

Selector plates supplied as standard allows the assembly as shown above.

Assembly with 2 different pressures and with the exhaust piped to both end plates.

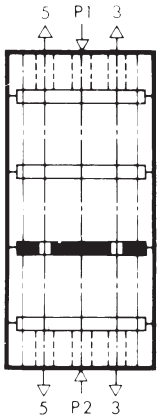

For this assembly a selector plate with connections between 3, 5 is necessary.

Assembly with 1 supply on 1 plate but with exhausts from the 2nd end plate.

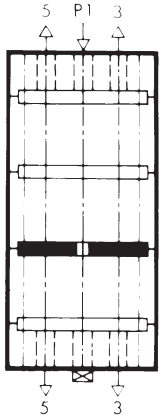

For this assembly a selector plate allows flow through port 1 if required. The supply port in the second plate must be plugged.

Assembly with the supply port in 1 end plate and the exhaust from the other end plate.

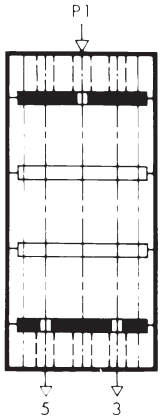

For this assembly you require 2 selector plates, 1 allowing flow through port 1 and 1 allowing flow through ports 3, 5. With ISO 1 bases this arrangement allows the assembly without plugging any ports.

00305GB-2017/R01
Availability, design and specifications are subject to change without notice. All rights reserved.

CHOICE OF EQUIPMENT

description	parts list	ports					code	
		1-3-5		2-4		12-14	ISO 1	ISO 2
		ISO 1	ISO 2	ISO 1	ISO 2	ISO 1-2		
metallic joinable subbase with side ports	1 subbase + 2 seals 1 selector plate (connects ports 1 - 3 - 5) 2 G 1/4 plugs 1 G 1/8 plug 2 assembly diabolos	-	-	G 1/4	G 1/2	G 1/8	**35500088**	**35500102**
set of 2 end plates	2 end plates + 2 seals 1 blank selector plate (no flow) 1 selector plate (connects ports 1 - 3 - 5) 2 assembly diabolos	G 3/8	G 3/4	-	-	G 1/8	**35500087**	**35500101**
blank selector plate (no flow)							**88135501**	**88135506**
selector plate (connects port 1)							**88135512**	**88135513**
selector plate (connects ports 3 and 5)							**88135510**	**88135511**
selector plate (connects ports 1 - 3 - 5)							**88135502**	**88135507**
selector plate (connects ports 1 - 3 - 5 and 1 pilot 12 or 14)							**88135503**	**88135508**
selector plate (connects ports 1 - 3 - 5 and 2 pilots 12 and 14)							**88135504**	**88135509**

SET OF TRANSFER PLATES AND CONNECTIONS

• Allow connection of ISO 1 and ISO 2 metallic joinable subbases, with side port .

Set including : - A transfer module to allow connection of subbases ISO 1 and ISO 2
- One end plate ISO 2 (ports 1 - 3 - 5 : G 3/4)
- One end plate ISO 1 (ports 1 - 3 - 5 : G 3/8)

SPECIFICATIONS

designation	type	catalogue number	E (mm)	
set of transfer plate and connections for joinable **metallic** subbases with **side port**	**ISO 1 - ISO 2**	**35500390**	30	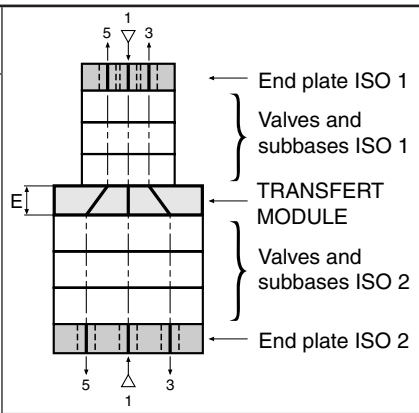

ACCESSORIES (see «ACCESSORIES» page)

00305GB-2017/R01
Availability, design and specifications are subject to change without notice. All rights reserved.

DIMENSIONS (mm), WEIGHT (kg)

SPOOL VALVES ON **METALLIC JOINABLE** SUBBASES
Side ports - **ISO 1-2**

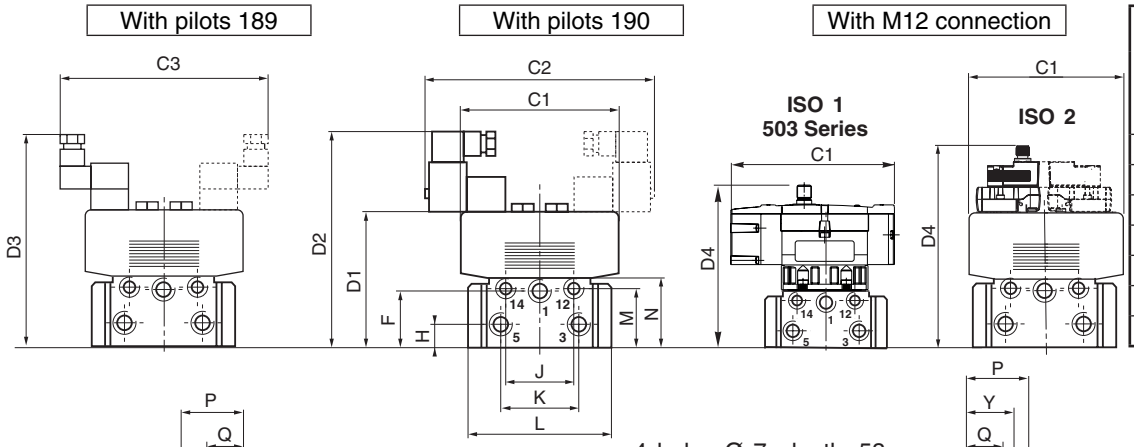

number of subbases	ISO 1 A (mm)	ISO 1 B (mm)	ISO 2 A (mm)	ISO 2 B (mm)
2	146	106	192	168
3	189	149	248	224
4	232	192	304	280
5	275	235	360	336
6	318	278	416	392
7	361	321	472	448
8	404	364	528	504

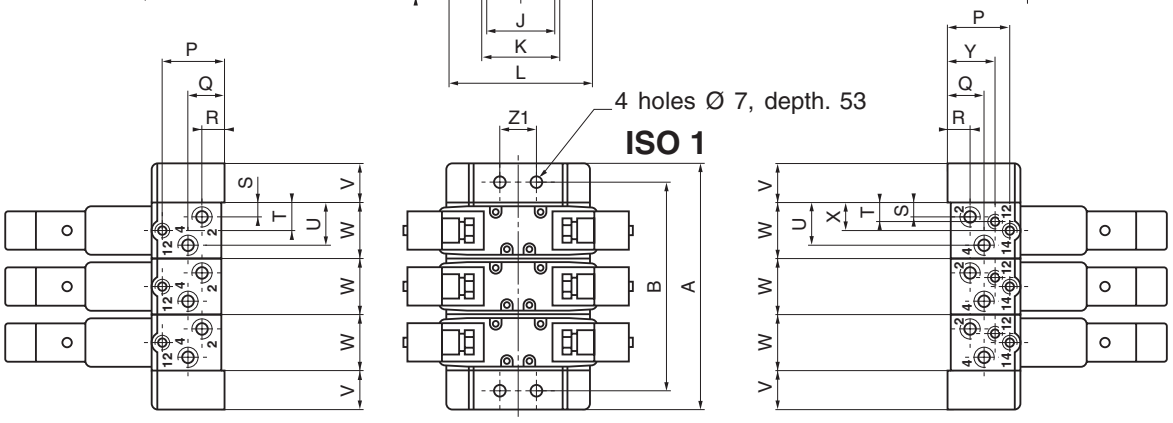

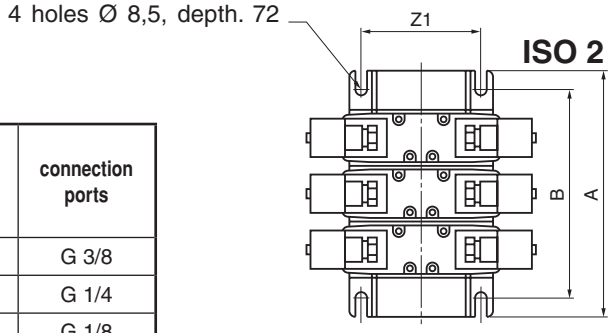

n° ports	connection ports
1-3-5	G 3/8
2-4	G 1/4
12-14	G 1/8

number of subbases	weight (1) ISO 1 189	ISO 1 190	ISO 1 M12	ISO 2 189	ISO 2 190	ISO 2 M12
2	3,66	3,90	3,40	5,196	5,436	4,966
3	4,86	5,22	4,47	6,374	6,734	6,074
4	6,06	6,54	5,54	7,652	8,132	7,252
5	7,26	7,86	6,61	8,930	9,530	8,430
6	8,46	9,18	7,68	10,208	10,928	9,608
7	9,66	10,50	8,75	11,888	12,728	11,188
8	10,86	11,82	9,82	13,166	14,126	12,366

(1) Spool valves with 2 pilots 189 + subbases + end plates
Pilot weight : 1 x 189 = 0,120 kg - 1 x 190 = 0,180 kg
M12 **ISO1** 1 x M12 = 0,058 kg - 2 x M12 = 0,110 kg
M12 **ISO2** 1 x M12 = 0,073 kg - 2 x M12 = 0,140 kg

	C1	C2	C3	D1	D2	D3	D4	F	H	J	K	L	M	N	P	Q	R	S	T	U	V	W	X	Y	Z1
ISO 1	136	178	176	95	168	163	140	42	16	53	59	106	44	53	44	13	13	11	17,5	32	30	43	26	30	28
ISO 2	150	198	171	126	197	191	185	62	30	62	62	126	72	80	68	36	17	15	18	41	40	58	38	64	104

ASSEMBLY OF SUBBASES

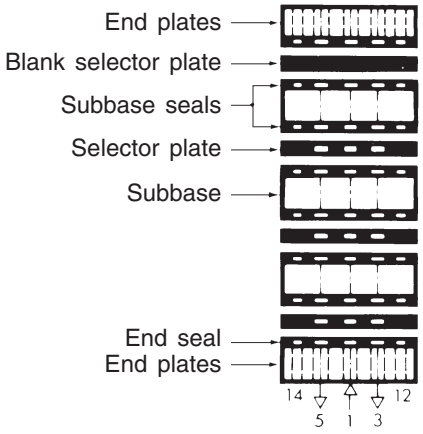

CONNECTION

End plates and subbases are connected together using a system of diabolos and grub screws.

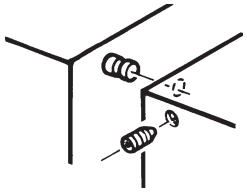

00305GB-2017/R01
Availability, design and specifications are subject to change without notice. All rights reserved.

503 accessories

Blank station plate kit	Sandwich pressure block	Sandwich exhaust block
G503AW428300003	G503AW428300003	G503AX428300001
R503AS425575001	R503ARS1GJ14M20	R503ARD1GJ14M20
Sandwich speed control kit	Sandwich Pressure Regulators	

SPECIFICATIONS

designation			symbol		catalogue number ISO 1	ISO 2	ISO 3
Blanking plate to cover interface This plate allows later assembly with a spool valve.			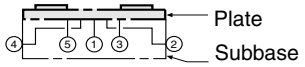		**88135517**	**88135518**	**88135519**
Flow regulator sandwich This unit, fitted between the subbase and the valve, incorporates 2 flow regulators in the exhaust ports 3 and 5. Flow regulators can be used to control the speed of a double acting cylinder. Weights : **ISO 1** : 0,230 kg - **ISO 2** : 0,440 kg **- ISO 3** : 1 kg			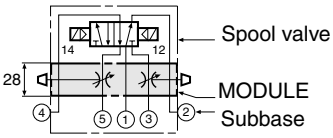		**34600476**	**34600477**	-
Separate pressure supply module This unit, fitted between the subbase and the valve, allows an individual valve to be supplied with a different pressure from that in the main manifold. The pressure feed within the side bases is not blocked by adding this plate. Pressure supply port P : G 1/4			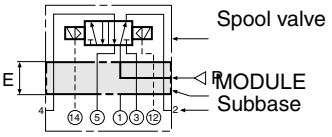		**35500118**	-	-
Sandwich pressure regulator module This module, which is placed between a subbase and a spool valve, is designed to regulate the pressure and the port according to: - Adjustable pressure: 0.5 to 10 bar - G1/8 (A) port on top for pressure gauge connection - Locking adjustment knob of "Pull-Turn-Push" type 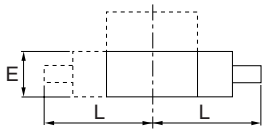 ISO 1 : E=45 mm L=146 mm ISO 2 : E=60 mm L=180 mm ISO 3 : E=67 mm L=208 mm	**on port 1** (supply pressure)	regulator flow at 6 bar : **ISO 1** : 550 l/min weight : 0,387 kg **ISO 2** : 1000 l/min weight : 1,680 kg **ISO 3** : 2000 l/min weight : 2,210 kg	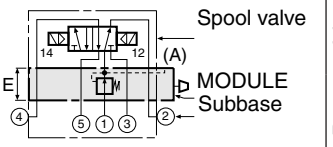	Button side 12	**34600474**	-	-
				14	**34600471**	-	-
	on port 2	regulator flow at 6 bar : **ISO 1** : 850 l/min weight : 0,387 kg **ISO 2** : 1400 l/min weight : 1,680 kg **ISO 3** : 2700 l/min weight : 2,210 kg	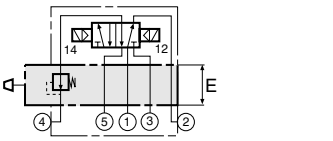		**34600458**	-	-
	on port 4	regulator flow at 6 bar : **ISO 1** : 850 l/min weight : 0,387 kg **ISO 2** : 1400 l/min weight : 1,680 kg **ISO 3** : 2700 l/min weight : 2,210 kg	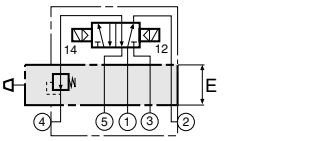		**34600459**	-	-
	on ports 2 et 4	regulator flow at 6 bar : **ISO 1** : 850 l/min weight : 0,577 kg **ISO 2** : 1400 l/min weight : 2,400 kg **ISO 3** : 2700 l/min weight : 3,200 kg	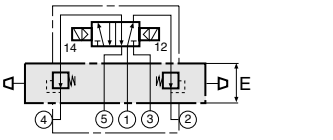		**34600460**	-	-
Gauge Ø40 (0 - 12 bar)						**34300014**	
G1/8 bracket connection for pressure gauge mounting						**88100617**	

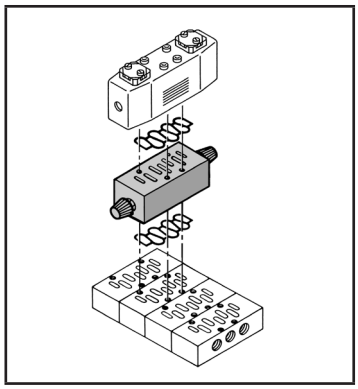

Sandwich flow regulator module

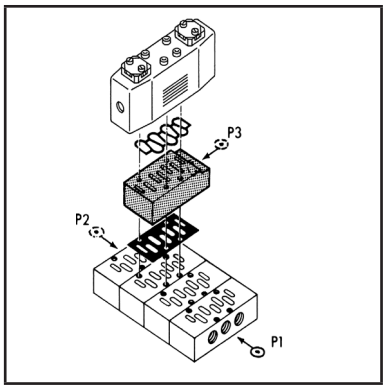

Separate pressure supply module

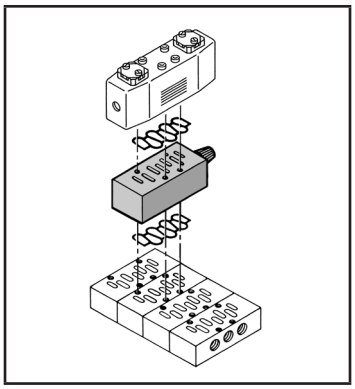

Sandwich pressure regulator module

00305GB-2017/R01
Availability, design and specifications are subject to change without notice. All rights reserved.