Technical Data Sheet
Zone 22 Explosion Proof Switchgear

CDPD68
Issue 2

Craig & Derricott has been manufacturing enclosed switchgear for more than 70 years. We have incorporated all of that experience in producing an outstanding product that has now been approved for use in explosive dust atmospheres. Using high quality die cast aluminium and hinged door sheet steel enclosures the range covers 20A - 100A ratings.

Design & Safety Features

- All items allow for the fitting of up to three padlocks in the 'Off' position.
- Units are inclusive of fixings outside of the enclosure seal area and an external earth point.

Catalogue Numbers

Rating	Format	Cat. No.	Enclosure Size
20A	6P+2 EB Aux	SDDG206EBZ22	A
25A	3P+2 EB Aux	SDDG253EBZ22	
32A	3P+2 EB Aux	SDDG323EBZ22	
	6P+2 EB Aux	SDDG326EBZ22	B
40A	3P+2 EB Aux	SDDG403EBZ22	
	6P+2 EB Aux	SDDG406EBZ22	
63A	3P+2 EB Aux	SDDG633EBZ22	
	3P+2 EB Aux	SDMG633EBZ22	C
	6P+2 EB Aux	SDMG636EBZ22	D
100A	3P	SDGC01003Z22	3A
	3P+N	SDGC01003NZ22	
	3P+N+2 EB Aux	SDGC01003NEBZ22	
	3P+2 EB Aux	SDGC01003EBZ22	



Certification Details

Die cast Aluminium / Sheet Steel

Coding

Ex II 3D
Ex tc IIIB T85°C Dc

Complies in part or in full with standards:-

BS EN 60079-0, BS EN 60079-31
BS EN 60529, BS EN 60947-3, BS EN 60204-1

Technical Specification

Data supplied against tests to IEC/BS EN 60947-3

Application	Sym.	Unit	Category	20A 6P	25A 3P	32A 3P+6P	40A 3P	40A 6P	63A 3P+6P	100A 3P
Rated thermal current	I_{the}	A		20	25	32	40	40	63	100
Rated insulation voltage	U_i	V		690	690	690	690	690	690	1000
Rated impulse voltage	U_{imp}	kV		6.0	6.0	6.0	6.0	6.0	6.0	8.0
Rated operational power (3 phase AC)		kW	380/440V - AC23	7.5	11	15	15	15	25	59
			500V - AC23	7.5	15	15	15	15	30	63
			690V - AC23	7.5	15	15	15	15	30	51
Rated short time withstand current (1 sec)	I_{cw}	A		250	500	600	600	600	1300	2600
Max. fuse size for short circuit protection (gG Characteristic)		kA	10kA	20	35	35	40	40	80	160
			25kA	16	32	32	32	32	63	160
			50kA	-	32	32	32	32	63	160
Connecting capacity		-	Terminal type							
		mm^2	Flexible cable	2.5 x 2	6	6	6	6	16	50
		mm^2	Rigid cable	2.5 x 2	10	10	10	10	25	70
		Nm	Tightening torque	1.0	1.2	1.2	1.2	1.2	1.2	2

CRAIG& DERRICOTT
www.craigandderricott.com
Craig & Derricott Ltd
Hall Lane, Walsall Wood,
Walsall, West Midlands WS9 9DP
t: +44(0)1543 375541 f: +44(0)1543 361619
e: sales@craigandderricott.com

Dimensions

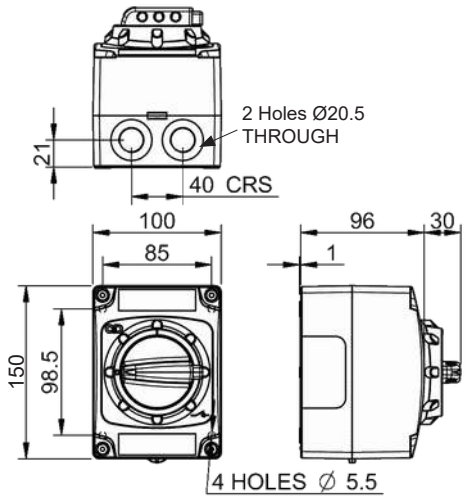

Enclosure A

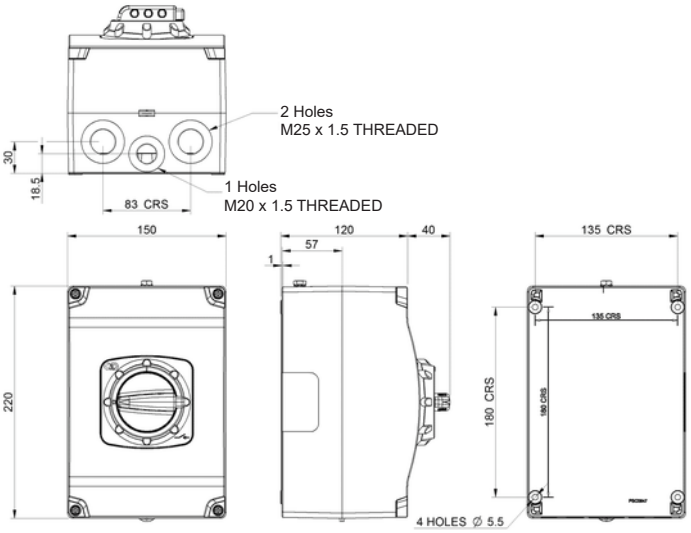

Enclosure B

Enclosure C & D

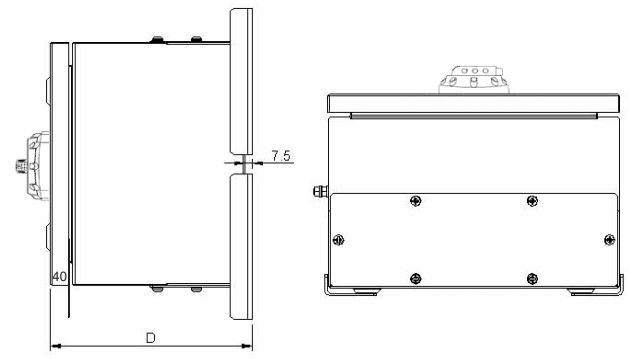

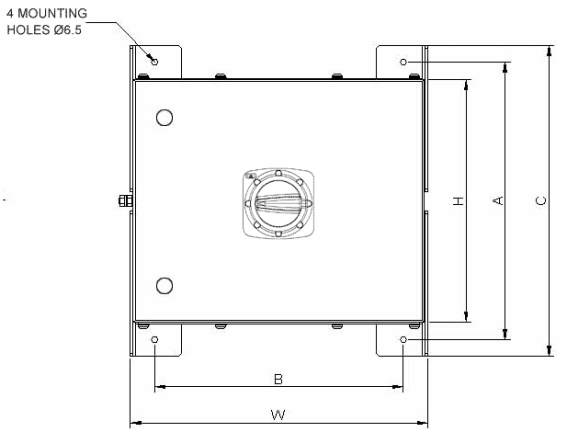

Dim	H	W	D	A	B	C
Size C	250	256	108	286	206	320
Size D	250	306	208	286	256	320

Enclosure 3A

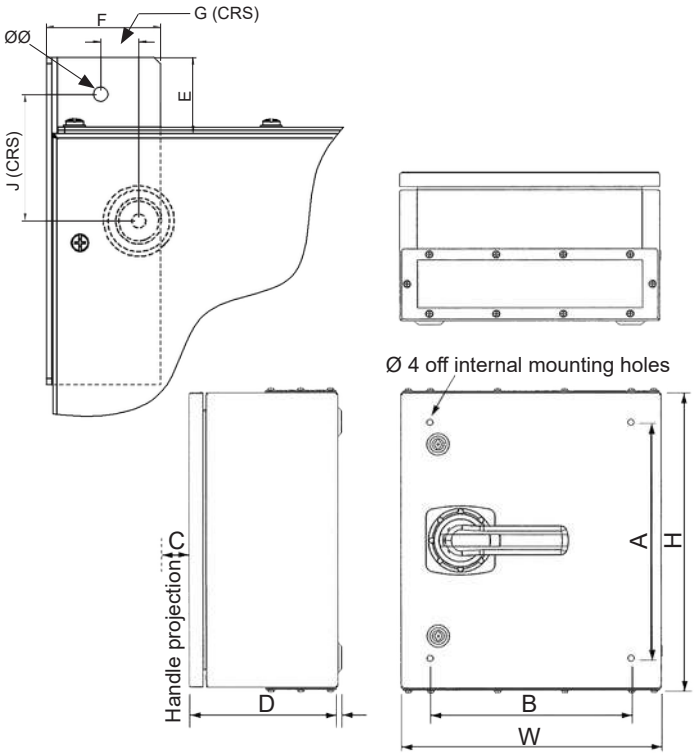

Dim	H	W	D	A	B	C	Ø
3A	350	300	175	270	220	67	8.5

External Feet

Dim	E	F	G	J	ØØ
3A	35	58	13	58	8.5

Craig & Derricott Ltd
Hall Lane, Walsall Wood,
Walsall, West Midlands WS9 9DP
t: +44(0)1543 375541 f: +44(0)1543 361619
e: sales@craigandderricott.com