Miniature Slide Switches

Specifications:

Contact rating:	12 V DC, 100 mA
Contact resistance:	< 20 mΩ
Insulation resistance:	> 100 MΩ at 500 V DC
Dielectric strength:	500 V, 50 Hz for the duration of 1 minute
Operating temperature:	–20 °C to +85 °C / MFP 213x: –25 °C to +85 °C
Mechanical life:	minimum 10 000 operations
Contacts:	copper alloy, silver-plated over nickel barrier
Slide colour:	black, further colours on request
Soldering conditions:	wave-soldering – max.: 5 sec, 260 °C ± 5 °C

Models:	Switching functions		
MFP 113 D non-shorting	on	on	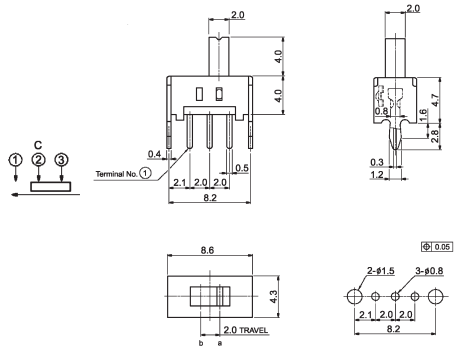
MFP 213 N non-shorting	on	on	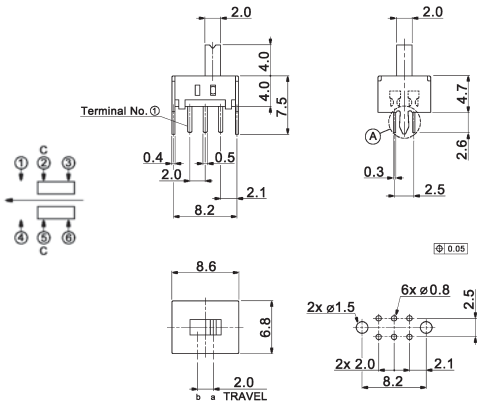
MFP 213 P shorting	on	on on	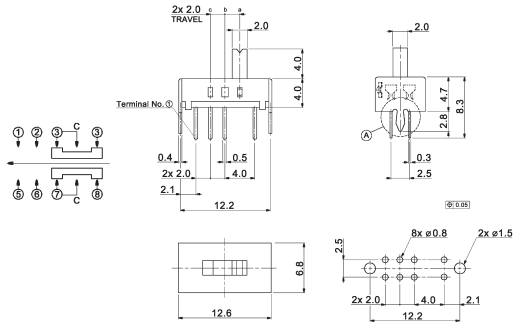







6