L64M, L64C - Olympian Plus plug-in system Lubricators

— Port size: 1/4" ... 3/4" (ISO G/ PTF)

— Micro-fog plug-in lubricators for best lubrication in general purpose pneumatic applications

— Oil-fog option available



Technical features

Medium:
Compressed air

Maximum operating pressure:
17 bar (246 psi)

Start point:
1,5 dm3/s

Bowl size:
0,2 litre (7 fl oz) standard
1 litre (34 fl oz) optional

Ambient/Media temperature:
-20° ... +80°C (-4° ... +176°F)
Air supply must be dry enough to avoid ice formation at temperatures below +2°C (+35°F).

Materials:
Body & yoke: Zinc alloy
Sight dome: Transparent PA
Elastomers: NBR

Technical data L64C - Oil-fog lubricators; standard models

Symbol	Port size	Size	Flow * (dm3/s)	Bowl	Weight (kg)	Model
	G1/4	–	25	Metal	1,42	L64C-2GP-EDN
	G3/8	–	62	Metal	1,4	L64C-3GP-EDN
	G1/2	Basic	72	Metal	1,37	L64C-4GP-EDN
	G3/4	–	72	Metal	1,73	L64C-6GP-EDN
	Without yoke	–		Metal	0,94	L64C-NNP-EDN

Technical data L64M - Micro-fog lubricators; standard models

Symbol	Port size	Size	Flow * (dm3/s)	Bowl	Weight (kg)	Model
	G1/4	–	25	Metal	1,42	L64M-2GP-EDN
	G3/8	–	62	Metal	1,40	L64M-3GP-EDN
	G1/2	Basic	72	Metal	1,37	L64M-4GP-EDN
	G3/4	–	72	Metal	1,73	L64M-6GP-EDN
	Without yoke	–		Metal	0,94	L64M-NNP-EDN

* Typical flow with 6,3 bar (91 psi) inlet pressure and 0,5 bar (7 psi) pressure drop

Option selector

L64★-★★P-E★★

Type	Substitute
Oil-fog	C
Micro-fog	M
Port size	**Substitute**
1/4"	2
3/8"	3
1/2"	4
3/4"	6
Without yoke	N
Threads	**Substitute**
PTF	A
ISO G (standard)	G
Without yoke (standard)	N

Options	Substitute
None	N
Quick fill device	Q
Bowl	**Substitute**
Metal with liquid level indicator; 0,2 litre	D
Long metal bowl with liquid level indicator; 1 litre	A

Our policy is one of continued research and development. We therefore reserve the right to amend, without notice, the specifications given in this document. (1997 - 8080e) © 2024 Norgren GmbH.

Flow characteristics

Port size 1/2"

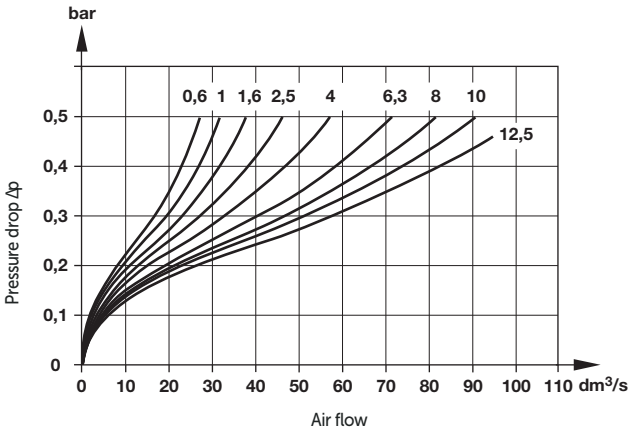

Accessories

Thread	Models with G-thread Single yoke  5	Double yoke 	3/2 Shut-off valve Threaded inlet only 	Threaded outlet only 	End connector kit  2	Rear entry bracket kit  8
G1/4	Y64A-2GA-N1N	Y64A-2GA-N2N	T64T-2GB-P1N	T64T-2GC-P1N	–	–
G3/8	Y64A-3GA-N1N	Y64A-3GA-N2N	T64T-3GB-P1N	T64T-3GC-P1N	–	–
G1/2	Y64A-4GA-N1N	Y64A-4GA-N2N	T64T-4GB-P1N	T64T-4GC-P1N	74505-50	–
G3/4	Y64A-6GA-N1N*	Y64A-6GA-N2N*	T64T-6GB-P1N	T64T-6GC-P1N	74505-53	18-026-981
1/4 PTF	Y64A-2AA-N1N	Y64A-2AA-N2N	T64T-2AB-P1N	T64T-2AC-P1N	–	–
3/8 PTF	Y64A-3AA-N1N	Y64A-3AA-N2N	T64T-3AB-P1N	T64T-3AC-P1N	–	–
1/2 PTF	Y64A-4AA-N1N	Y64A-4AA-N2N	T64T-4AB-P1N	T64T-4AC-P1N	74505-52	–
3/4 PTF	Y64A-6AA-N1N*	Y64A-6AA-N2N*	T64T-6AB-P1N	T64T-6AC-P1N	74505-55	–

*These yokes are supplied with two end connenctor kits as standard.

Bracket mounting  1	Nut  4	Quick fill device 	Yoke connector kit  9	Porting block 	Padlock with two keys 
74504-50 (0,2 litre bowl)	74502-89	18-011-024	74503-51	74507-50	0613633 (brass)
74504-52 (1,0 litre bowl)					

Service kit

Service kit 
L64C-KIT (Oil-fog)
L64M-KIT (Micro-fog)

Our policy is one of continued research and development. We therefore reserve the right to amend, without notice, the specifications given in this document. (1997 - 8080e) © 2024 Norgren GmbH.

Dimensions

Dimensions in mm
Projection/First angle

0,2 litre bowl

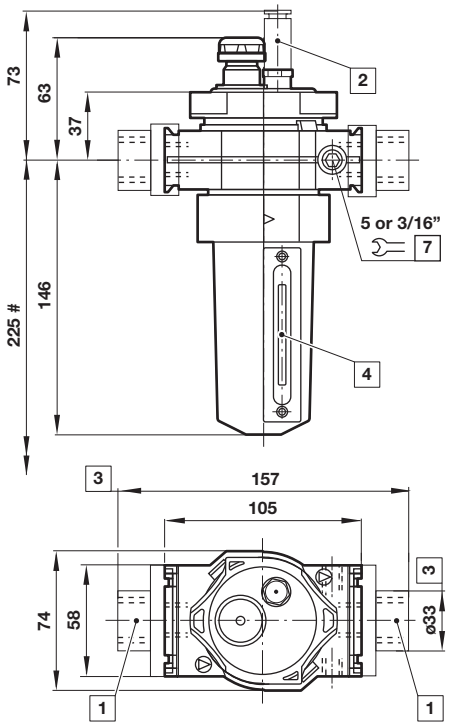

Minimum clearance required to remove bowl
1 Main ports 1/4", 3/8", 1/2" or 3/4"
2 Quick fill device
3 For main ports 3/4" only
4 Sight glass
7 Gauge port 1/8"

1 litre bowl

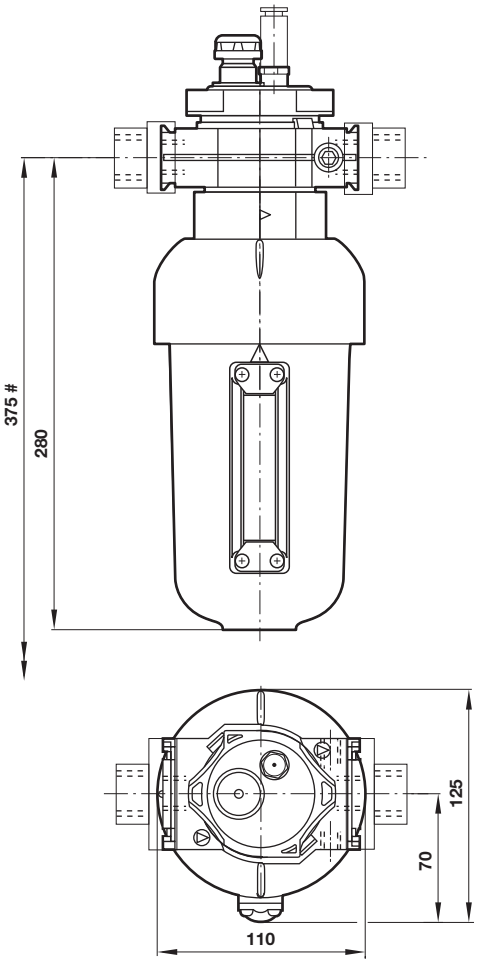

Single yoke with bracket mounting

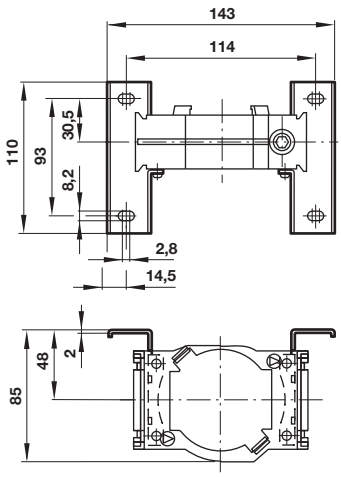

Double yoke with bracket mounting

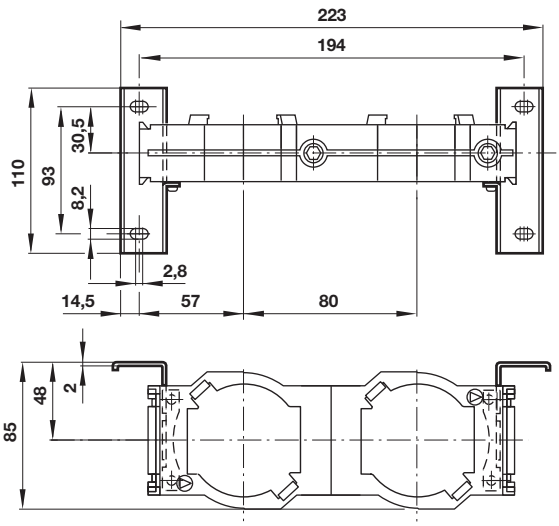

Our policy is one of continued research and development. We therefore reserve the right to amend, without notice, the specifications given in this document. (1997 - 8080e) © 2024 Norgren GmbH.

Rear entry bracket
18-026-981

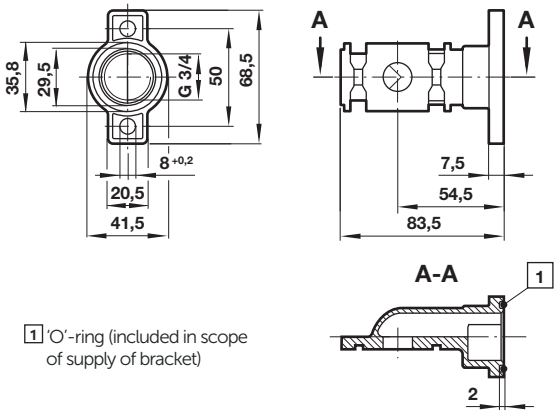

1 'O'-ring (included in scope of supply of bracket)

Porting block
74507-50

Dimensions in mm
Projection/First angle

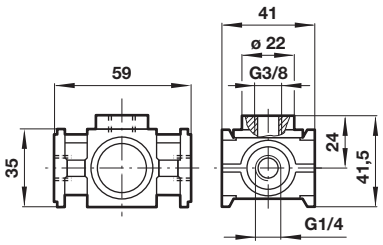

3/2 Shut-off valve

Symbol	A	B	ø C	Model
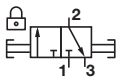	G1/4	48	27	T64T-2G*-P1N
	G3/8	48	27	T64T-3G*-P1N
	G1/2	48	27	T64T-4G*-P1N
	G3/4	51	33	T64T-6G*-P1N

* B = Threaded inlet only, C = Threaded outlet only

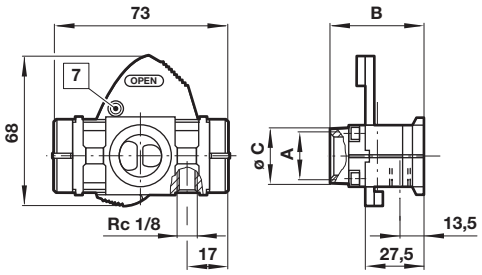

7 Padlock hole ø7,5 mm

Warning

These products are intended for use in industrial compressed air systems only. Do not use these products where pressures and temperatures can exceed those listed under »Technical features/data«.
Before using these products with fluids other than those specified, for non-industrial applications, life-support systems or other applications not within published specifications, consult IMI Precision Engineering. Through misuse, age, or malfunction, components used in fluid power systems can fail in various modes.

The system designer is warned to consider the failure modes of all component parts used in fluid power systems and to provide adequate safeguards to prevent personal injury or damage to equipment in the event of such failure.
System designers must provide a warning to end users in the system instructional manual if protection against a failure mode cannot be adequately provided.
System designers and end users are cautioned to review specific warnings found in instruction sheets packed and shipped with these products.

Our policy is one of continued research and development. We therefore reserve the right to amend, without notice, the specifications given in this document. (1997 - 8080e) © 2024 Norgren GmbH.