Inclinometer MEMS / capacitive | **IN81, 1- and 2-dimensional** | **Analog**



The inclinometers of the IN81 series allow measuring 2-dimensional inclinations in the range of ±85° or 1-dimensional inclinations up to 360°.

With their high robustness, their protection level up to max. IP69k and their wide temperature range from -40 °C to +85 °C, these devices are ideally suitable for outdoor use – e.g. for mobile automation applications.

Analog output



High protection level | Shock / vibration resistant | Reverse polarity protection | Redundancy | Temperature range

Robust

- High protection rating IP67 and IP69k in one device.
- Highest robustness thanks to metal housing.
- Stable accuracy over the whole temperature range from -40 °C up to +85 °C.
- Non long-term drift thanks to sensor array technique.

Versatile

- Preset and teach function.
- Measuring direction 1- or 2-dimensional.
- With switch outputs.
- Stacked installation possible for redundancy.

Order code

8.IN81	.	X	X	X	X	.	X	2	X
Type		a	b	c	d		e	f	g

a *Measuring direction*
1 = 1-dimensional
2 = 2-dimensional

b *Measuring range*
1 = ±10° [1]
2 = ±15° [1]
3 = ±30° [1]
4 = ±45° [1]
5 = ±60° [1]
6 = ±85° [1]
7 = 0 ... 360° (±180°) [2]
8 = 0 ... 180° (±90°) [2]

c *Interface*
1 = 4 ... 20 mA / 12 bit
2 = 0.1 ... 4.9 V / 12 bit
3 = 0.5 ... 4.5 V / 12 bit
4 = 0 ... 5 V / 12 bit
5 = 0 ... 10 V / 12 bit

d *Filter*
1 = no filter
2 = filter value 0.1 Hz
3 = filter value 0.3 Hz
4 = filter value 0.5 Hz
5 = filter value 1.0 Hz
6 = filter value 2.0 Hz
7 = filter value 5.0 Hz
8 = filter value 10.0 Hz

e *Optional switching outputs*
1 = none
2 = 2 switch outputs [3]

f *Supply voltage*
2 = 10 ... 30V / 40 mA
15 ... 30 V for interface 5

g *Type of connection*
1 = 1 x M12 connector, 8-pin
2 = 1 x M12 connector, 5-pin
3 = 2 x M12 connector, 8-pin + 5-pin [4]

1) Can only be ordered in conjunction with measuring direction 2-dimensional.
2) Can only be ordered in conjunction with measuring direction 1-dimensional.
3) Can only be ordered in connection with type of connection 3.
4) Can only be ordered in connection with option 2 switching outputs.

© Fritz Kübler GmbH, subject to errors and changes. 02/2023

Inclinometer MEMS / capacitive	IN81, 1- and 2-dimensional	Analog

Accessories

		Order no.
Teach-Adapter 	for controlling the control inputs for the following functions: - Preset (reference point setting) - Teaching (measuring range) - Filter setting - Switching points setting	**8.0010.9000.0017**
Adapter plate	for installation identical to Kübler inclinometer IS40	**8.0010.4062.0000**

Cables and connectors

		Order no.
Preassembled cables	M12 female connector with coupling nut, 8-pin, A coded, straight single ended 5 m [16.40'] PVC cable	**05.00.6041.8211.005M**
	M12 male connector with external thread, 5-pin, A coded, straight single ended 5 m [16.40'] PVC cable	**05.00.6091.A411.005M**
Connectors	M12 female connector with coupling nut, 8-pin, A coded, straight (metal)	**05.CMB 8181-0**
	M12 male connector with external thread, 5-pin, A coded, straight (metal)	**8.0000.5111.0000**

Further Kübler accessories can be found at: kuebler.com/accessories
Further Kübler cables and connectors can be found at: kuebler.com/connection-technology

Technical data

Electrical characteristics current interface

Supply voltage		10 ... 30 V DC
Current consumption (no load)		max. 40 mA [1]
Reverse polarity protection of the supply voltage		yes
PowerON Time (PowerOn until valid output value)		< 0.5 s
Measuring axes		1 or 2
Measuring range	1-dimensional	180° / 360°
	2-dimensional	max. ±85° (see order code)
Resolution	internal sensor	0,01°
	D/A converter	12 bit
Accuracy at 25 °C [2]	1-dimensional	typ. ±0.5°
	2-dimensional	typ. ±1.0°
Repeat accuracy		±0.2°
Transverse sensitivity [3]		typ. ±0.3°
Temperature coefficient	1-dimensional	typ. ±0.005 %/K
	2-dimensional	typ. ±0.015 %/K
Output load	at 10 VDC	max. 200 Ohm
	at 24 VDC	max. 900 Ohm
	at 30 VDC	max. 1200 Ohm
Setting time		< 1 ms (R_{Burden} = 900 Ohm, 25 °C)
Sampling rate		50 Hz (20 ms)
Limit frequency	with Butterworth filter	0.1 ... 10 Hz, 8th order

Electrical characteristics voltage interface

Supply voltage		
0.1 ... 4.9 V / 0.5 ... 4.5 V / 0 ... 5 V		10 ... 30 V
0 ... 10 V		15 ... 30 V
Current consumption (no load)		max. 40 mA [1]
Reverse polarity protection of the supply voltage		yes
PowerON Time (PowerOn until valid output value)		< 0.5 s
Measuring axes		1 or 2
Measuring range	1-dimensional	180° / 360°
	2-dimensional	max. ±85° (see order code)
Resolution	0 ... 5 V / 0 ... 10 V	12 bit
	0.1 ... 4.9 V / 0.5 ... 4.5 V	11 bit
Accuracy at 25 °C [4]	1-dimensional	typ. ±0.5°
	2-dimensional	typ. ±1.0°
Repeat accuracy		±0.2°
Transverse sensitivity [3]		typ. ±0.3°
Temperature coefficient	1-dimensional	typ. ±0.0015 %/K
	2-dimensional	typ. ±0.005 %/K
Output load		max. 10 mA
Setting time		< 1 ms (R_{Burden} = 1000 Ohm, 25 °C)
Sampling rate		50 Hz (20 ms)
Limit frequency	with Butterworth filter	0.1 ... 10 Hz, 8th order

1) Max. 270 mA under full load on both switching outputs.
2) Over the whole temperature and max. measuring range; 1 dim ≤ ±1.9°, 2 dim ≤ ±2.3°.
3) Only for 2-dimensional measuring direction.
4) Over the whole temperature and max. measuring range; 1 dim ≤ ±0.8°, 2 dim ≤ ±1.2°.

A full description of the technical data can be found in the relevant product manual at **www.kuebler.com.**

© Fritz Kübler GmbH, subject to errors and changes. 02/2023

Inclinometer MEMS / capacitive	IN81, 1- and 2-dimensional	Analog

Mechanical characteristics

Connection	1 x M12 connector	8-pin, male connector
	1 x M12 connector	5-pin, female connector
	2 x M12 connector	8-pin, male / 5-pin, female connector
Weight		approx. 185 g [6.53 oz]
Protection acc. to EN 60529		IP67 + IP69k [1]
Working temperature range		-40 °C ... +85 °C [-40 °F ... +185 °F]
Material	housing	aluminum
Shock resistance acc. to EN 60068-2-27		1000 m/s², 6 ms
Vibration resistance acc. to EN 60068-2-6		100 m/s², 10 ... 2000 Hz
Dimensions		80 x 60 x 23 mm [3.15 x 2.36 x 0.91"]

EMC

Relevant standards	EN 61326-1	Electrical equipment for measurement, control and laboratory use
	EN 61000-6-2	Immunity for industrial environments
	EN 55011 Klasse B, EN 61000-6-3	Emitted interferences for residential environments
	EN ISO 14982	Agricultural and forestry machinery, electromagnetic compatibility, test methods and acceptance criteria [2]
	EN 13309	Construction machinery - Electromagnetic compatibility of machines with internal supply voltage [2]

Control inputs

Fuctions: Preset (reference point setting)
Teaching (measuring range)
Filter setting
Switching points setting

Switch output

optional: 2 switch outputs

Electrical characteristics

Input		active HIGH
Signal level	High	min. 60% of +V, max. +V
	Low	max. 30% of +V
Min. pulse duration		+V for min. 1 s

Electrical characteristics

Permissible load		max. 100 mA
Signal level (under max. load)	High	min. +V - 3.0 V
	Low	max. 0.5 V
Short circuit proof outputs		yes

Approvals

E1 compliant in accordance with	ECE guideline
UL compliant in accordance with [1]	File no. E224618
CE compliant in accordance with	
EMC Directive	2014/30/EU
RoHS Directive	2011/65/EU
UKCA compliant in accordance with	
EMC Regulations	S.I. 2016/1091
RoHS Regulations	S.I. 2012/3032

1) The IP protection class is not UL-tested. Verified by Kübler.
2) Without pulse 5.

© Fritz Kübler GmbH, subject to errors and changes. 02/2023

Inclinometer MEMS / capacitive	IN81, 1- and 2-dimensional	Analog

Course of the output signal – factory setting

1-dimensional sensor
Example with a measuring range of 360°

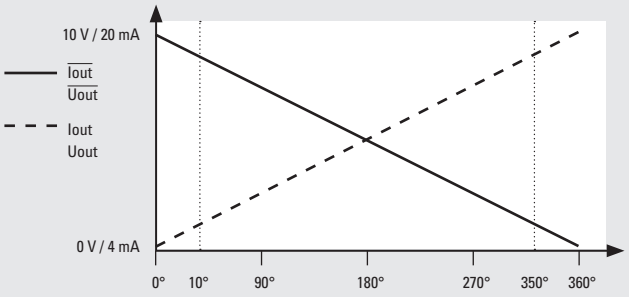

2-dimensional sensor
Example with a measuring range of ±85°

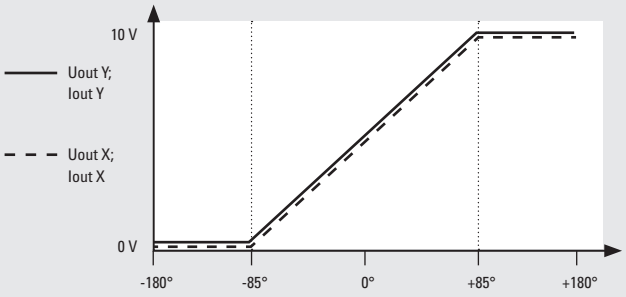

Optional with 2 switching outputs
(factory setting can be changed via the teach-function)

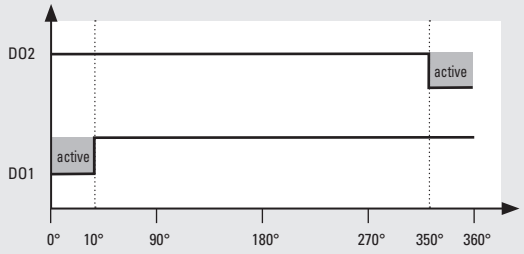

Optional with 2 switching outputs
(factory setting can be changed via the teach-function)

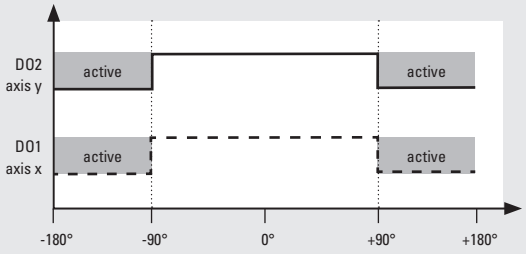

© Fritz Kübler GmbH, subject to errors and changes. 02/2023

Inclinometer MEMS / capacitive | **IN81, 1- and 2-dimensional** | **Analog**

Terminal assignment, 1 dimensional

Type of connection	M12 connector, 8-pin								
1	Signal – Interface 1 (current):	0 V	+V	Iout+	Iout-	$\overline{\text{Iout+}}$	$\overline{\text{Iout-}}$	Teach 1	Teach 2
	Signal – Interface 2, 3, 4, 5 (voltage):	0 V	+V	Uout+	Uout-	$\overline{\text{Uout+}}$	$\overline{\text{Uout-}}$	Teach 1	Teach 2
	Pin:	1	2	3	4	5	6	7	8



Type of connection	M12 connector, 5-pin						
2	Signal – Interface 1 (current):	+V	$\overline{\text{Iout+}}$	0 V	Iout+	Teach	
	Signal – Interface 2, 3, 4, 5 (voltage):	+V	$\overline{\text{Uout+}}$	0 V	Uout+	Teach	
	Pin:	1	2	3	4	5	

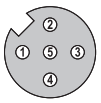

Type of connection	M12 connector, 8-pin								
3	Signal – Interface 1 (current):	0 V	+V	Iout+	Iout-	$\overline{\text{Iout+}}$	$\overline{\text{Iout-}}$	Teach 1	Teach 2
	Signal – Interface 2, 3, 4, 5 (voltage):	0 V	+V	Uout+	Uout-	$\overline{\text{Uout+}}$	$\overline{\text{Uout-}}$	Teach 1	Teach 2
	Pin:	1	2	3	4	5	6	7	8
	Switching outputs option – M12 connector, 5-pin								
	Signal:	n.c.	DO1	DO2	n.c.	0 V			
	Pin:	1	2	3	4	5			

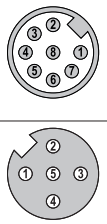

Terminal assignment, 2 dimensional

Type of connection	M12 connector, 8-pin								
1	Signal – Interface 1 (current):	0 V	+V	Iout+ X	Iout- X	Iout+ Y	Iout- Y	Teach 1	Teach 2
	Signal – Interface 2, 3, 4, 5 (voltage):	0 V	+V	Uout+ X	Uout- X	Uout+ Y	Uout- Y	Teach 1	Teach 2
	Pin:	1	2	3	4	5	6	7	8



Type of connection	M12 connector, 5-pin						
2	Signal – Interface 1 (current):	+V	Iout+ Y	0 V	Iout+ X	Teach	
	Signal – Interface 2, 3, 4, 5 (voltage):	+V	Uout+ Y	0 V	Uout+ X	Teach	
	Pin:	1	2	3	4	5	

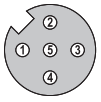

Type of connection	M12 connector, 8-pin								
3	Signal – Interface 1 (current):	0 V	+V	Iout+ X	Iout- X	Iout+ Y	Iout- Y	Teach 1	Teach 2
	Signal – Interface 2, 3, 4, 5 (voltage):	0 V	+V	Uout+ X	Uout- X	Uout+ Y	Uout- Y	Teach 1	Teach 2
	Pin:	1	2	3	4	5	6	7	8
	Switching outputs option – M12 connector, 5-pin								
	Signal:	n.c.	DO1	DO2	n.c.	0 V			
	Pin:	1	2	3	4	5			

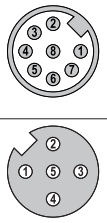

+V: Supply voltage +V DC
0V Supply voltage ground GND (0 V)

Teach 1 Input 1 for various teaching functions
Teach 2 Input 2 for various teaching functions

DO1 Digital output 1
DO2 Digital output 2

Uout+ X X axis voltage output
Uout- X X axis voltage output GND
Uout+ Y Y axis voltage output
Uout- Y Y axis voltage output GND

1-axis version
Uout+ Voltage output
Uout- Voltage output GND
$\overline{\text{Uout+}}$ Inverted voltage output
$\overline{\text{Uout-}}$ Inverted voltage output GND

Iout+ X X axis current output
Iout- X X axis current output GND
Iout+ Y Y axis current output
Iout- Y Y axis current output GND

1-axis version
Iout+ Current output
Iout- Current output GND
$\overline{\text{Iout+}}$ Inverted current output
$\overline{\text{Iout-}}$ Inverted current output GND

© Fritz Kübler GmbH, subject to errors and changes. 02/2023

Inclinometer MEMS / capacitive	IN81, 1- and 2-dimensional	Analog

Direction of inclination

1-dimensional

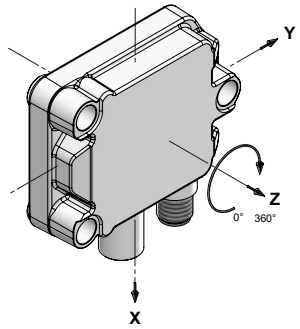

2-dimensional

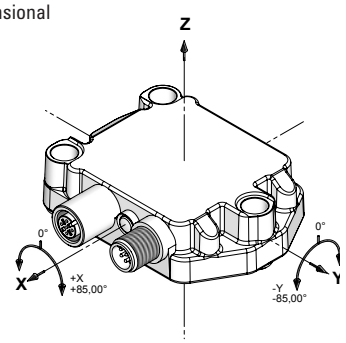

Dimensions

Dimensions in mm [inch]

1 x M12 connector 8-pin, male contacts

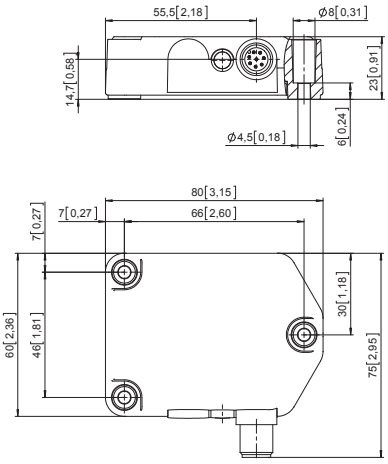

1 x M12 connector 8-pin, male contacts
1 x M12 connector 5-pin, female contacts

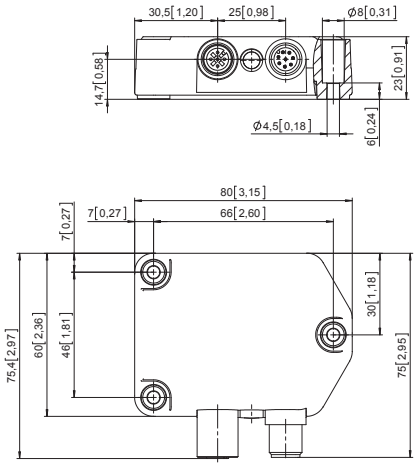

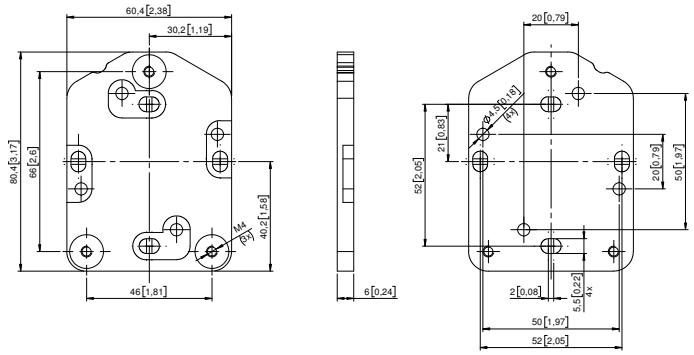

© Fritz Kübler GmbH, subject to errors and changes. 02/2023