Finger guards



- **Material:** Fiberglass-reinforced plastic
- **Note:** Finger guard according to DIN EN ISO 13857 (previously EN 294).
  Plastic guards may not be used for the following models:
  8200 JH3 / JH4
  3200 JH3 / JH4
  4100 NH5 - NH8

Fan size	Fan series	Type	Order number	B	C	D	E	Mounting
60 x 60	600 F, 620, 630, 600 N, 600 J	**LZ28-3**	9920028003	$60^{-0.5}$	$50.0^{\pm0.2}$	3.0	24	A3
80 x 80	8450, 8400 N, 8300 N, 8200 J, 8000 N, CoR 8200 J	**LZ32-2**	9920032002	$80^{-0.5}$	$71.5^{\pm0.2}$	7.0	34	A1
		LZ32-P	9920032001					A2
		LZ32-3	9920032003					A3
92 x 92	3400 N, 3300 N, 3200 J, 3250 J, 3900, 3000	**LZ23-2**	9920023002	$92^{-0.5}$	$82.5^{\pm0.2}$	6.5	46	A1
		LZ23-3	9920023003					A3
119 x 119	4400 F, 4400 FN, 4300 N, 4400, 4100 N, 4000 N, 4000 Z, 9900, DV 4100	**LZ30-5**	9920030005	$119^{-0.5}$	$105^{\pm0.2}$	6.5	50	A2
		LZ30-6	9920030006					A4
		LZ30-P	9920030001					A2
127 x 127	5200 N, DV 5200, 5900	**LZ33-1**	9920033001	$127^{-0.5}$	$113^{\pm0.2}$	6.5	50	A2
		LZ33-2	9920033002					A4

Subject to change

All measurements are given in mm.

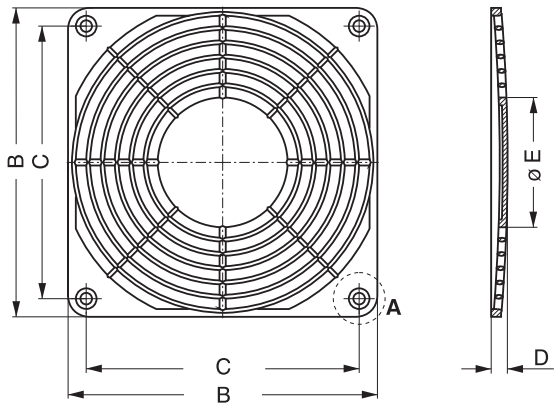

Screw connection

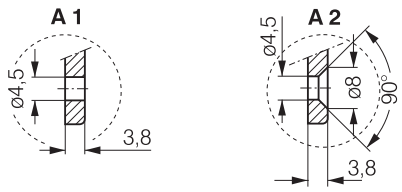

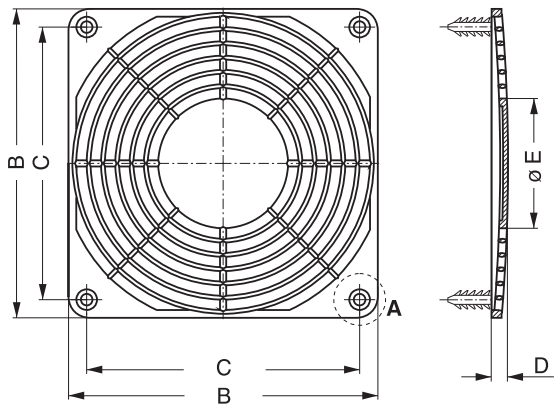

Barbed inserts

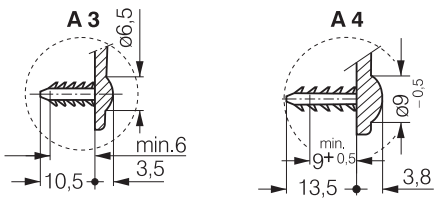

Only suitable for bore hole diameter 4.3 - 4.7.