SSA-EBx-12ED1xx Series Emergency Stop Push Buttons

Features

Illuminated Flush Mount Electro-Mechanical Push Buttons

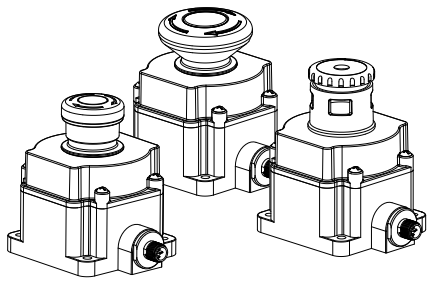

- Rugged design; easy installation with no assembly or individual wiring required
- Push-to-stop, twist-to-release (all models), or pull-to-release (standard and large) operation per IEC 60947-5-5
- Latching design complies with ISO 13850; direct (positive) opening operation per EN 60947-5-1
- Compliant with ANSI B11.19, NFPA 79, and IEC/EN 60204-1 Emergency Stop requirements
- “Safe Break Action” ensures normally closed (NC) contacts will open if the contact block is separated from the actuator
- 8-pin M12 quick disconnect; 1/2-in NPT port on terminal strip models (cable-gland included)
- Models with highly visible indication of actuation (armed or depressed/latched button)
- "Emergency Stop" legend included

Models SSA-EB… series are "mushroom-style" electro-mechanical emergency stop push buttons. When the button is armed, the switch's safety contacts (normally closed/NC) are closed and its monitoring contacts (normally open/NO), if present, are open. When the button is pushed, the switch's safety contacts open, and the monitoring contacts close. The contacts remain in this condition until the push button is manually rearmed by twisting clockwise the red push button actuator, or by pulling on the models with the standard actuator. The SSA-EBx-12ED1xx Series Emergency Stop Push Button series has a flat mounting base for ease of mounting without requiring an additional enclosure.

The EZ-LIGHT® illumination logic allows for easy identification of a pushed/actuated button. An armed button will light a steady yellow or green illumination or off (depending on model), a pushed/actuated button is indicated by a red illumination (flashing or solid depending on model). An optional input allows an armed button to illuminate a steady red to indicate a machine stop or emergency stop condition. In a series string of E-Stop buttons, this logic gives the user the choice to either have the armed buttons stay yellow (green) or turn steady red when a stop condition exists.

SSA-EB1M… series padlock-style lockable emergency stop push buttons are intended to prevent unauthorized or accidental resetting of a pushed/latched button. The SSA-EB1M… series are not to be used as an energy isolating device or as the sole means of complying with Lockout/Tagout or with the requirements of the isolation of hazardous energy (see OSHA 29CFR1910.147, ANSI Z244.1, CSA Z460, ISO 14118). The locking feature can be used to provide supervisory/personal control and provide an additional safety measure(s) to reduce the likelihood of inadvertent arming and energization of the emergency stop circuit.

Models

Model	Pushbutton	EZ-Light® Illumination Logic and Description	Connection
SSA-EB1PL-12ED1Q8	Standard 40 mm	OFF (armed), RED (solid, PUSH)	8-pin M12 QD
SSA-EB1PLXR-12ED1Q8	Standard 40 mm	OFF (armed), RED (flash, PUSH)	
SSA-EB1PLYR-12ED1Q8	Standard 40 mm	YELLOW (armed), RED (flash, PUSH)	
SSA-EB1PLGR-12ED1Q8	Standard 40 mm	GREEN (armed), RED (flash, PUSH)	
SSA-EB2PLXR-12ED1Q8	Large 60 mm	OFF (armed), RED (flash, PUSH)	
SSA-EB1MLP-12ED1Q8	Lockable 44 mm	OFF (armed), RED (solid, PUSH)	
SSA-EB1MLXRP-12ED1Q8	Lockable 44 mm	OFF (armed), RED (flash, PUSH)	
SSA-EB1MLYRP-12ED1Q8	Lockable 44 mm	YELLOW (armed), RED (flash, PUSH)	
SSA-EB1MLGRP-12ED1Q8	Lockable 44 mm	GREEN (armed), RED (flash, PUSH)	
SSA-EB1PLXR-12ED1	Standard 40 mm	OFF (armed), RED (flash, PUSH)	Terminal Strip, 1/2-in NPT port
SSA-EB1PLYR-12ED1	Standard 40 mm	YELLOW (armed), RED (flash, PUSH)	
SSA-EB1PLGR-12ED1	Standard 40 mm	GREEN (armed), RED (flash, PUSH)	
SSA-EB1MLXRP-12ED1	Lockable 44 mm	OFF (armed), RED (flash, PUSH)	
SSA-EB1MLYRP-12ED1	Lockable 44 mm	YELLOW (armed), RED (flash, PUSH)	
SSA-EB1MLGRP-12ED1	Lockable 44 mm	GREEN (armed), RED (flash, PUSH)	

© Banner Engineering Corp.

Important... Read this before proceeding!

The user is responsible for satisfying all local, state, and national laws, rules, codes, and regulations relating to the use of this product and its application. Banner Engineering Corp. has made every effort to provide complete application, installation, operation, and maintenance instructions. Please contact a Banner Applications Engineer with any questions regarding this product.

The user is responsible for making sure that all machine operators, maintenance personnel, electricians, and supervisors are thoroughly familiar with and understand all instructions regarding the installation, maintenance, and use of this product, and with the machinery it controls. The user and any personnel involved with the installation and use of this product must be thoroughly familiar with all applicable standards, some of which are listed within the specifications. Banner Engineering Corp. makes no claim regarding a specific recommendation of any organization, the accuracy or effectiveness of any information provided, or the appropriateness of the provided information for a specific application.

WARNING:
- **Not a safeguarding device**
- Failure to follow these instructions could result in serious injury or death.
- This device is not considered a safeguarding device because it requires an overt action by an individual to stop machine motion or hazards. A safeguarding device limits or eliminates an individual's exposure to a hazard without action by the individual or others. This device cannot be substituted for required safeguarding. Refer to the applicable standards to determine those requirements.

US Application Standards

ANSI B11.0 Safety of Machinery, General Requirements, and Risk Assessment

ANSI B11.19 Performance Criteria for Safeguarding

NFPA 79 Electrical Standard for Industrial Machinery

International/European Standards

EN ISO 12100 Safety of Machinery – General Principles for Design — Risk Assessment and Risk Reduction

ISO 13850 (EN 418) Emergency Stop Devices, Functional Aspects – Principles for Design

IEC 62061 Functional Safety of Safety-Related Electrical, Electronic and Programmable Control Systems

EN ISO 13849-1:2015 Safety-Related Parts of Control Systems

IEC/EN 60204-1 Electrical Equipment of Machines Part 1: General Requirements

EN 60947-1 Low Voltage Switchgear – General Rules

EN 60947-5-1 Low Voltage Switchgear – Electromechanical Control Circuit Devices

EN 60947-5-5 Low Voltage Switchgear – Electrical Emergency Stop Device with Mechanical Latching Function

EU/UK Declaration of Conformity (DoC)

Banner Engineering Corp. herewith declares that these products are in conformity with the provisions of the listed directives and all essential health and safety requirements have been met. For the complete DoC, please go to www.bannerengineering.com.

Product	Directive
SSA-EB Series Emergency Stop Push Button	EU: Machinery Directive 2006/42/EC
	UKCA: Machinery (Safety) Regulation 2008

Representative in EU: Spiros Lachandidis, Managing Director, **Banner Engineering BV** Park Lane, Culliganlaan 2F bus 3, 1831 Diegem, BELGIUM

Representative in UK: Tony Coghlan, Managing Director, **Turck Banner LTD** Blenheim House, Blenheim Court, Wickford, Essex SS11 8YT, Great Britain

Emergency Stop Considerations

NFPA 79, ANSI B11.19, IEC/EN 60204-1, and ISO 13850 specify emergency stop requirements, including the following:
- Emergency-stop push buttons shall be located at each operator control station and at other operating stations where emergency shutdown is required.
- Stop and emergency-stop push buttons shall be continuously operable and readily accessible from all control and operating stations where located. Do not mute or bypass E-stop buttons.

© Banner Engineering Corp.

- Actuators of emergency-stop devices shall be colored red. The background immediately around the device actuator shall be colored yellow (where possible). The actuator of a push-button-operated device shall be of the palm or mushroom-head type.
- The emergency-stop actuator shall be a self-latching type.

WARNING:
- **Do not mute or bypass any emergency stop device**
- Muting or bypassing the safety outputs renders the emergency stop function ineffective.
- ANSI B11.19, NFPA 79 and IEC/EN 60204-1 require that the emergency stop function remains active at all times.

WARNING:
- **Connect two or more devices to the same safety module (controller) in series**
- Connecting devices in parallel defeats the switch contact monitoring ability of the module and creates an unsafe condition that could result in serious injury or death.
- Failure to test each device individually in this manner could result in undetected faults and create an unsafe condition that could result in serious injury or death.
- Connect the contacts of the corresponding pole of each switch in series. Never connect the contacts of multiple switches in parallel. Individually actuate (engage) each device, then release (or re-arm) and reset the safety module. This allows the module to check each switch and its wiring to detect faults. Perform this check during the prescribed checkouts.

Installation and Maintenance

The device must not be affected by environmental conditions. **Install the device so that operation is not impeded, but should be protected against inadvertent operation** (for example, accidental actuation by being bumped or leaned against).Do not operate the switch using a tool. Do not expose the switch to excessive shocks and vibrations, otherwise the switch may be deformed or damaged, causing malfunction or operation failure.M5 mounting hardware is included.

Electrical installation must be made by qualified personnel[1] and must comply with NEC (National Electrical Code), NFPA 79 or IEC/EN 60204-1, and all applicable local standards. It is not possible to give exact wiring instructions for a device that interfaces to a multitude of machine control configurations. The following is general in nature; it is recommended to perform a risk assessment to ensure appropriate application, interfacing/hookup, and risk reduction (see ISO 12100 or ANSI B11.0).

For SSA-EB1M... series padlock-style lockable emergency stop push buttons, make sure that an applicable padlock and hasp is used. The total weight of the padlock and hasp must not exceed 1500 g (3.3 lbs) or the switch may malfunction or fail.

WARNING:
- **Risk of electric shock**
- Use extreme caution to avoid electrical shock. Serious injury or death could result.
- Always disconnect power from the safety system (for example, device, module, interfacing, etc.), guarded machine, and/or the machine being controlled before making any connections or replacing any component. Lockout/tagout procedures might be required. Refer to OSHA 29CFR1910.147, ANSI Z244-1, or the applicable standard for controlling hazardous energy.
- Make no more connections to the device or system than are described in this manual. Electrical installation and wiring must be made by a Qualified Person[2] and must comply with the applicable electrical standards and wiring codes, such as the NEC (National Electrical Code), NFPA 79, or IEC 60204-1, and all applicable local standards and codes.

[1] A Qualified Person possesses a recognized degree or certificate or has extensive knowledge, training, and experience to solve problems relating to the emergency stop installation.
[2] A person who, by possession of a recognized degree or certificate of professional training, or who, by extensive knowledge, training and experience, has successfully demonstrated the ability to solve problems relating to the subject matter and work.

© Banner Engineering Corp.

Wiring

QD Pin	Terminal Strip	Color	Function	Connection and Pinout
1	1	White	AUX NO Output (Switched pin 2)	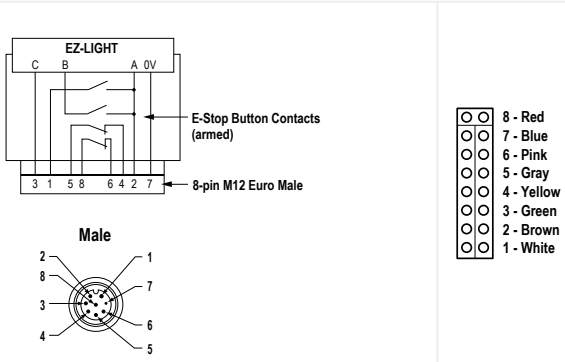
2	2	Brown	+24 V DC (12 to 30 V DC)	
3	3	Green	Stop Signal input from safety module or machine +24 V DC (12 to 30 V DC)	
4	4	Yellow	CH2a	
5	5	Gray	CH2b	
6	6	Pink	CH1a	
7	7	Blue	0 V DC	
8	8	Red	CH1b	

See "Illuminated models—Example wiring connection" on page 5.

SSA-EB1xxLYR-xx or SSA-EB1xxLGR-xx

Situation	Indication	Illumination Logic
Button Armed Pin 3 open	Yellow or green	Indicates button is armed If used, ES-FA-11AA Module status is in a reset/run condition (31/32 open)
Button Pushed Pin 3 open or +V DC	Red flashing	Indicates the button is pushed (actuated) Signal on Pin 3 has no effect on a button that has been pushed (actuated)
Button Armed Pin 3 = +V DC	Red	Indicates the machine is in an Emergency Stop or other stop condition, but that specific button has not been pushed (actuated) This optional signal (12 to 30 V DC) allows the user to indicate a stop condition by turning the armed indication to red (steady) indication

See "Illuminated models—Example wiring connection" on page 5.

SSA-EB1(2)xxLXR-xx

Situation	Indication	Illumination Logic
Button Armed Pin 3 open	Off	Indicates button is armed If used, ES-FA-11AA Module status is in a reset/run condition (31/32 open)
Button Pushed Pin 3 open or +V DC	Red flashing	Indicates the button is pushed (actuated) Signal on Pin 3 has no effect on a button that has been pushed (actuated)
Button Armed Pin 3 = +V DC	Red	Indicates the machine is in an Emergency Stop or other stop condition, but that specific button has not been pushed (actuated) This optional signal (12 to 30 V DC) allows the user to indicate a stop condition by turning the armed indication to red (steady) indication

See "Illuminated models—Example wiring connection" on page 5.

SSA-EB1xxL-xx

Situation	Indication	Illumination Logic
Button Armed Pin 3 open	Off	Indicates button is armed If used, ES-FA-11AA Module status is in a reset/run condition (31/32 open)
Button Pushed Pin 3 open or +V DC	Red	Indicates the button is pushed (actuated) Signal on Pin 3 has no effect on a button that has been pushed (actuated)
Button Armed Pin 3 = +V DC	Red	Indicates the machine is in an Emergency Stop or other stop condition, but that specific button has not been pushed (actuated) This optional signal (12 to 30 V DC) allows the user to indicate a stop condition by turning the armed indication to red (steady) indication

© Banner Engineering Corp.

Illuminated models—Example wiring connection

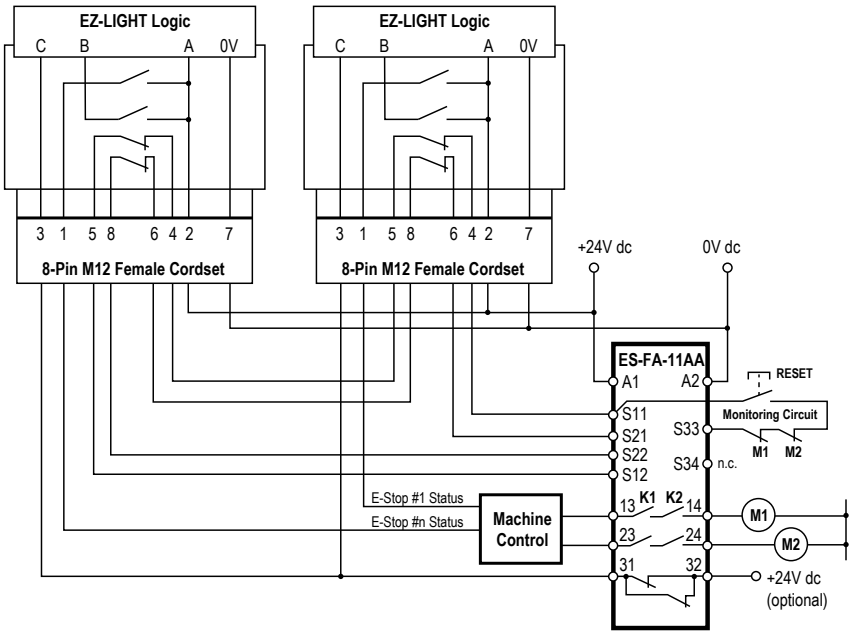

NOTE: Refer to the ES-FA-11AA E-Stop Safety Module datasheet (p/n 60606) for complete safety module installation information.

Checkout

At machine set up, a *Designated Person*[1] should test each safety point for proper machine shutdown response. A *Designated Person* should check the safety point for proper operation, physical damage, button looseness, and excessive environmental contamination. This should take place on a periodic schedule determined by the user, based on the severity of the operating environment and the frequency of switch actuations.

Adjust, repair, or replace components as needed. If inspection reveals contamination on the switch, thoroughly clean the switch and eliminate the cause of the contamination. Replace the switch and/or appropriate components when any parts or assemblies are damaged, broken, deformed, or badly worn; or if the electrical/mechanical specifications (for the environment and operating conditions) have been exceeded.

Always test the control system for proper functioning under machine control conditions after performing maintenance, replacing the safety point, or replacing any component of the device.

Specifications

Housing / Button

Polycarbonate / Polyamide / Aluminum

#10 or M5 (M5 hardware included); Maximum Tightening Torque: 0.56 N·m (5 in·lbf)

Operating Conditions

–25 °C to +55 °C (–13 °F to +131 °F)

45% to 85% relative humidity (no condensation)

Environmental Rating

For Indoor Use Only

IP65 (IEC60529)

Insulation Resistance

100 MΩ minimum (500 V DC megger)

Impulse Withstand Voltage

2.5 kV

Electrical Life

100,000 operations minimum, 250,000 operations minimum at 24 V AC/DC, 100 mA

Mechanical Life

250,000 operations

Shock Resistance

Operating extremes: 150 m/s^2 (15G)

Vibration Resistance

Operating extremes: 10 Hz to 500 Hz, amplitude 0.35 mm acceleration 50 m/s^2

LED Color

Yellow - 590 nm, Red - 618 nm, Green - 525 nm

LED Flash Rate

1.6 Hz at 50% duty cycle

[1] A *Designated Person* is identified in writing by the employer as being appropriately trained to perform a specified checkout procedure. A Qualified Person possesses a recognized degree or certificate or has extensive knowledge, training, and experience to solve problems relating to the emergency stop installation.

© Banner Engineering Corp.

Pollution Degree
3

Output Configuration
See "Installation and Maintenance" on page 3

Overvoltage Category
II

Contact Material/Bounce
Gold plated silver / 20 ms

When the button is reset, the normally closed contacts will chatter. When pressing the button, the normally open contacts will chatter. When designing a control circuit, take the contact chatter time into consideration. Do not expose the switch to external shocks, otherwise the contacts will bounce.

Rated Insulation Voltage (Ui)
60 V AC / 75 V DC

Rated Current (Ith)
2A

B10d
100,000 (based on ISO13849-1(2006))

LED Voltage/Current
SSA-EB1..LYR-.., SSA-EB1(2)..LXR-.., and SSA-EB1..L-..:12 V DC to 30 V DC; 120 mA at 12 V DC, 65 mA at 24 V DC, 60 mA at 30 V DC

SSA-EB1..LGR-..: 12 to 30 V dc; 135 mA at 12 V dc, 75 mA at 24 V dc, 70 mA at 30 V dc

Total Weight of Padlock and Hasp (SSA-EB1M..-..only)
1500 g (3.3 lb) maximum

Electrical Rating
Minimum load: 1 mA at 5 V AC/DC

SSA-EB1xx-xxED1Q8: 2 A at 60 V AC/75 V DC maximum

UL Applications: 1.5 A at 250 V AC, 1 A at 30 V DC (pilot duty)

CE Applications: AC-15: 1.5 A at 250 V AC, DC-13: 1 A at 30 V DC

Design Standards
Compliant with EN 60497-1 / -5-1, ISO 13850, ANSI B11.19 , NFPA 79, IEC/EN 60204-1

Date code format (U.S. Standard Format)
YYWWX: 2-digit year, 2-digit week, "X" internal code

Rated Operating Current

Safety Contact (N.C.)		30 V	60 V AC/75 V DC
AC 50/60 Hz	Resistive Load (AC-12)	-	2 A
	Inductive Load (AC-15)	-	2 A
DC	Resistive Load (DC-12)	2 A	0.4 A
	Inductive Load (DC-13)	1 A	0.22 A

Auxiliary Output (N.O.)		30 V	60 V AC/75 V DC
12 to 30 V DC (from supply pin 2)	Resistive Load (DC-12)	0.25 A	n.a.
	Inductive Load (DC-13)	0.25 A	n.a.

The operating current is classified according to EN 60947-5-1 making and breaking capacities and are measured at resistive/inductive load types specified in EN 60947-5-1. See "Electrical Rating" above for specific model and UL/CE maximum ratings.

Required Overcurrent Protection

WARNING: Electrical connections must be made by qualified personnel in accordance with local and national electrical codes and regulations.

Overcurrent protection is required to be provided by end product application per the supplied table.

Overcurrent protection may be provided with external fusing or via Current Limiting, Class 2 Power Supply.

Supply wiring leads < 24 AWG shall not be spliced.

For additional product support, go to www.bannerengineering.com.

Supply Wiring (AWG)	Required Overcurrent Protection (A)	Supply Wiring (AWG)	Required Overcurrent Protection (A)
20	5.0	26	1.0
22	3.0	28	0.8
24	1.0	30	0.5

Certifications

Banner Engineering BV
Park Lane, Culliganlaan 2F bus 3
1831 Diegem, BELGIUM

Turck Banner LTD Blenheim House
Blenheim Court
Wickford, Essex SS11 8YT
GREAT BRITAIN

Dimensions

All measurements are listed in millimeters [inches], unless noted otherwise.

© Banner Engineering Corp.

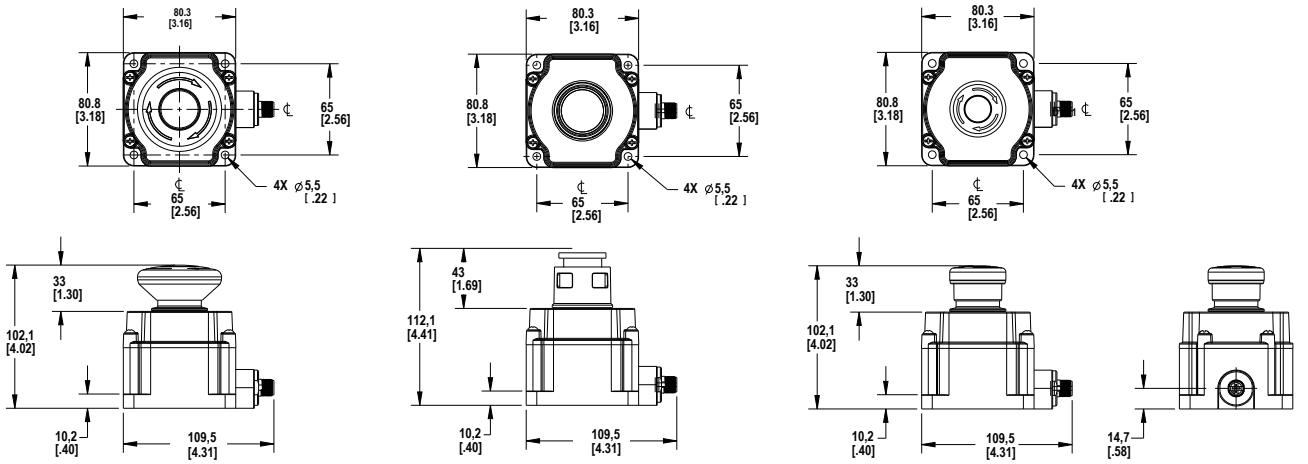

60 mm Push Button **Lockable Push Button** **Standard Push Button**

a	b	c	d
7 mm max	19 mm max	39 mm min	15 mm min(1)

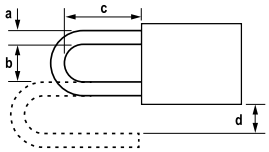

Accessories

Cordsets

8-Pin Threaded M12 Cordsets—Flying Leads					
Model	**Length**	**Style**	**Dimensions**	**Pinout (Female)**	
SXA-815D	4.57 m (15 ft)	Straight	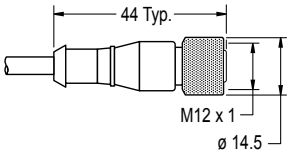	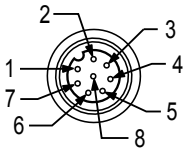	
SXA-825D	7.62 m (25 ft)				
SXA-850D	15.24 m (50 ft)				
SXA-8100D	30.48 m (100 ft)			1 = White 2 = Brown 3 = Green 4 = Yellow	5 = Gray 6 = Pink 7 = Blue 8 = Red

(1) Dimension d is 6 mm or more when attaching a padlock from the side of a switch

© Banner Engineering Corp.

8-Pin Threaded M12 Cordsets—Double Ended					
Model (8-pin/8-pin)	**Length**	**Style**	**Dimensions**	**Pinout**	
DEE2R-81D	0.3 m (1 ft)	Female Straight/ Male Straight	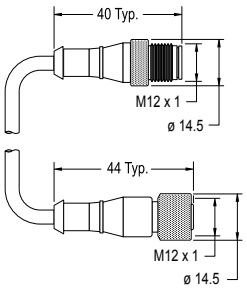	Female 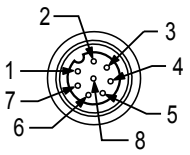 Male 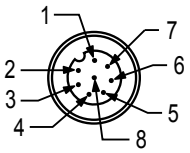	
DEE2R-83D	0.91 m (3 ft)				
DEE2R-88D	2.44 m (8 ft)				
DEE2R-815D	4.57 m (15 ft)				
DEE2R-825D	7.62 m (25 ft)				
DEE2R-850D	15.24 m (50 ft)				
DEE2R-875D	22.86 m (75 ft)				
DEE2R-8100D	30.48 m (100 ft)			1 = Brown 2 = Orange/Black 3 = Orange 4 = White	5 = Black 6 = Blue 7 = Green/Yellow 8 = Violet

See Banner Engineering catalog or go to www.bannerengineering.com for additional models and complete information.

Series Connection Cordset Solution

This interconnection solution allows for quick wiring of a series of string emergency stop buttons. For the models listed below, Branch #1 and Branch #2 are 300 mm (12 in) in length and the length of the trunk is listed below.

WARNING:

- **Do not defeat the cordset installation**
- Defeating the series connection cordset solution could result in serious injury or death.
- Install the CSS series connection cordset solution so they cannot be easily defeated. Ensure that mounting and routing of the cordsets that are connected to the Trunk, Branch #1, Branch #2, and the E-Stop QD connector does not allow access to the QD connectors or allow improper connection bypassing the function of the Emergency Stop.

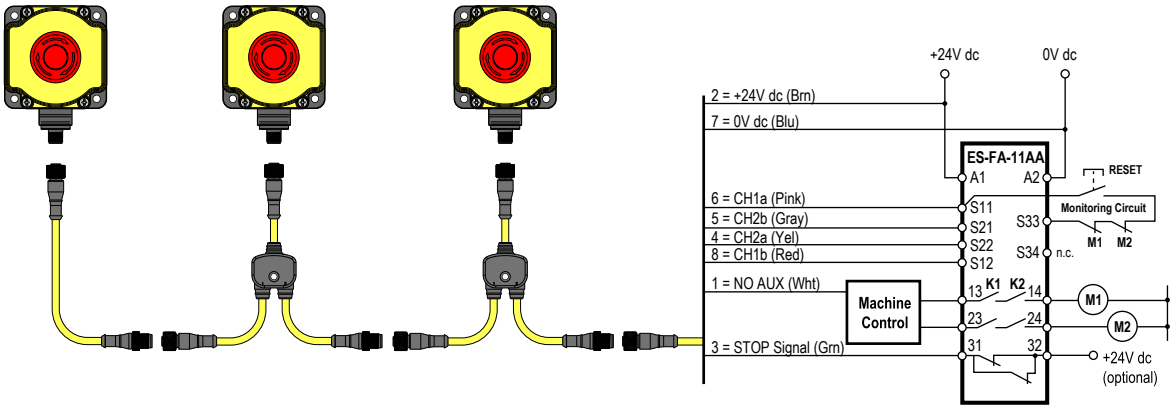

Model	Length	Description
CSS-M12F81M12M81M12F81	0.30 m (1 ft)	8-pin M12 QD splitter cordset for use with SSA- EB1xxLxx-12ED1Q8
CSS-M12F83M12M81M12F81	0.91 m (3 ft)	
CSS-M12F88M12M81M12F81	2.44 m (8 ft)	

© Banner Engineering Corp.

Wiring for the 8-pin splitter cordset

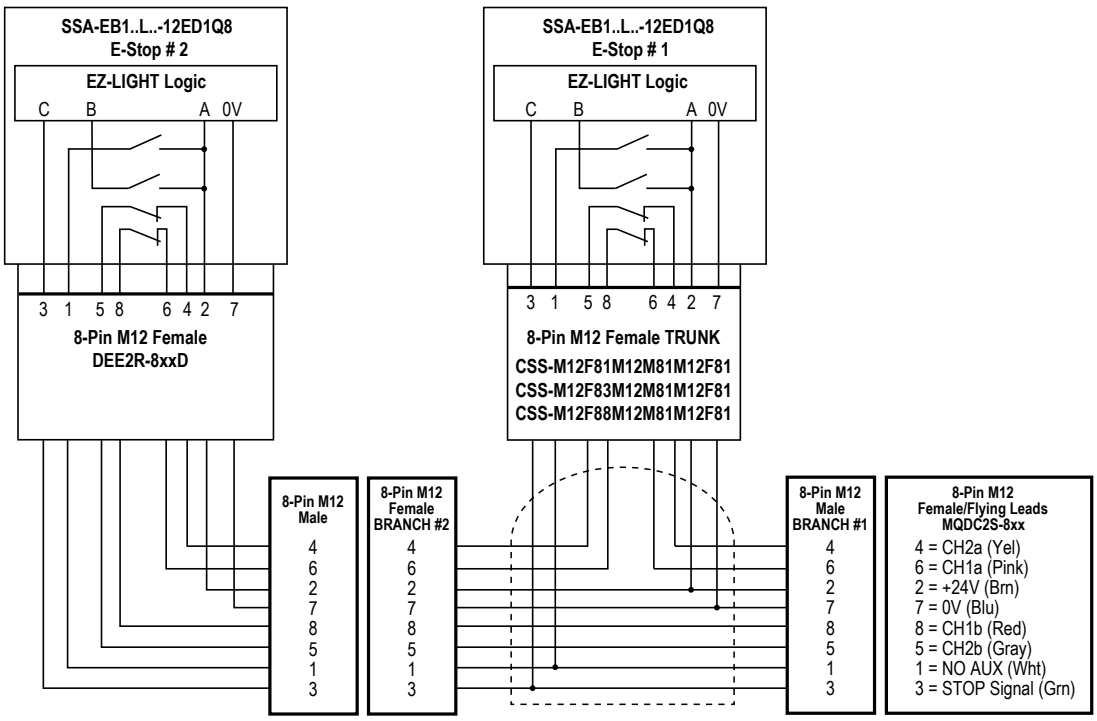

Dimensions of the 8-pin M12 splitter cordset

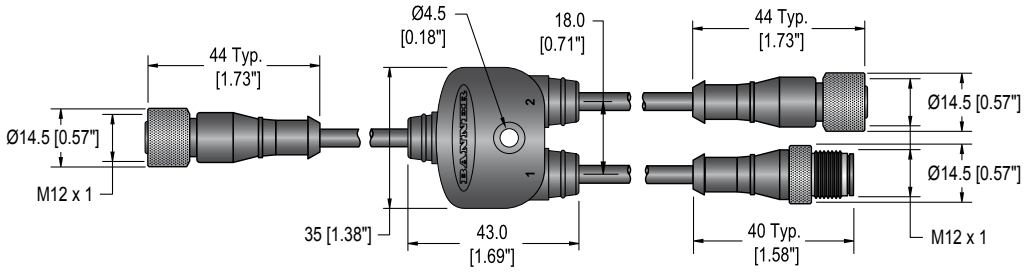

Pre-Installed Shroud

To order a unit with a shroud (model **ESC-1-YW**) pre-installed, the model number has an **S1** inserted after the LED color characters (for example **SSA-EB1PLYR-12ED1Q8** becomes **SSA-EB1PLYRS1-12ED1Q8**). Not available on lockable models. Contact Banner Engineering for availability.

© Banner Engineering Corp.

SSA-EB1PLxx-12ED1Q8 E-Stop with Shroud

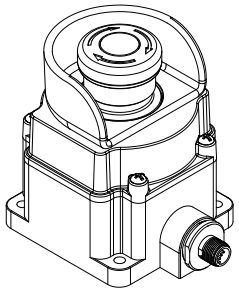

Dimensions for the SSA-EB1PLxx-12ED1Q8 E-stop with shroud

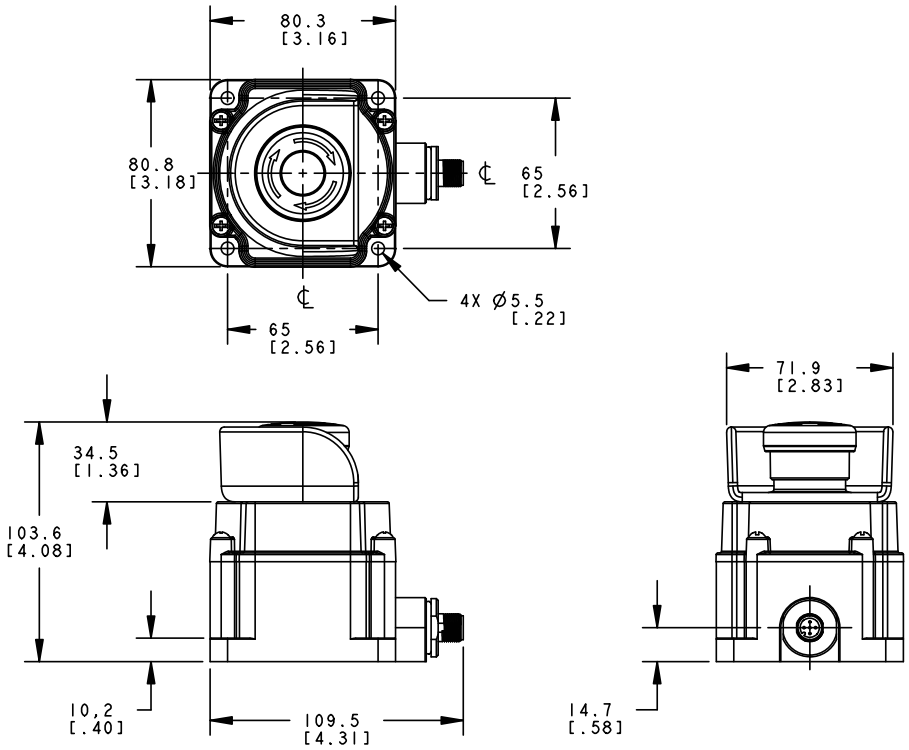

Banner Engineering Corp Limited Warranty

Banner Engineering Corp. warrants its products to be free from defects in material and workmanship for one year following the date of shipment. Banner Engineering Corp. will repair or replace, free of charge, any product of its manufacture which, at the time it is returned to the factory, is found to have been defective during the warranty period. This warranty does not cover damage or liability for misuse, abuse, or the improper application or installation of the Banner product.

THIS LIMITED WARRANTY IS EXCLUSIVE AND IN LIEU OF ALL OTHER WARRANTIES WHETHER EXPRESS OR IMPLIED (INCLUDING, WITHOUT LIMITATION, ANY WARRANTY OF MERCHANTABILITY OR FITNESS FOR A PARTICULAR PURPOSE), AND WHETHER ARISING UNDER COURSE OF PERFORMANCE, COURSE OF DEALING OR TRADE USAGE.

This Warranty is exclusive and limited to repair or, at the discretion of Banner Engineering Corp., replacement. **IN NO EVENT SHALL BANNER ENGINEERING CORP. BE LIABLE TO BUYER OR ANY OTHER PERSON OR ENTITY FOR ANY EXTRA COSTS, EXPENSES, LOSSES, LOSS OF PROFITS, OR ANY INCIDENTAL, CONSEQUENTIAL OR SPECIAL DAMAGES RESULTING FROM ANY PRODUCT DEFECT OR FROM THE USE OR INABILITY TO USE THE PRODUCT, WHETHER ARISING IN CONTRACT OR WARRANTY, STATUTE, TORT, STRICT LIABILITY, NEGLIGENCE, OR OTHERWISE.**

Banner Engineering Corp. reserves the right to change, modify or improve the design of the product without assuming any obligations or liabilities relating to any product previously manufactured by Banner Engineering Corp. Any misuse, abuse, or improper application or installation of this product or use of the product for personal protection applications when the product is identified as not intended for such purposes will void the product warranty. Any modifications to this product without prior express approval by Banner Engineering Corp will void the product warranties. All specifications published in this document are subject to change; Banner reserves the right to modify product specifications or update documentation at any time. Specifications and product information in English supersede that which is provided in any other language. For the most recent version of any documentation, refer to: www.bannerengineering.com.

For patent information, see www.bannerengineering.com/patents.

© Banner Engineering Corp.