Brand of NTN corporation

Technical data

UCP319

Bearing units



Grey cast housing, radial insert ball bearing with socket set screws,seal with slinger

KIT CONTENT

UC319G2, P319

VISUAL (S)

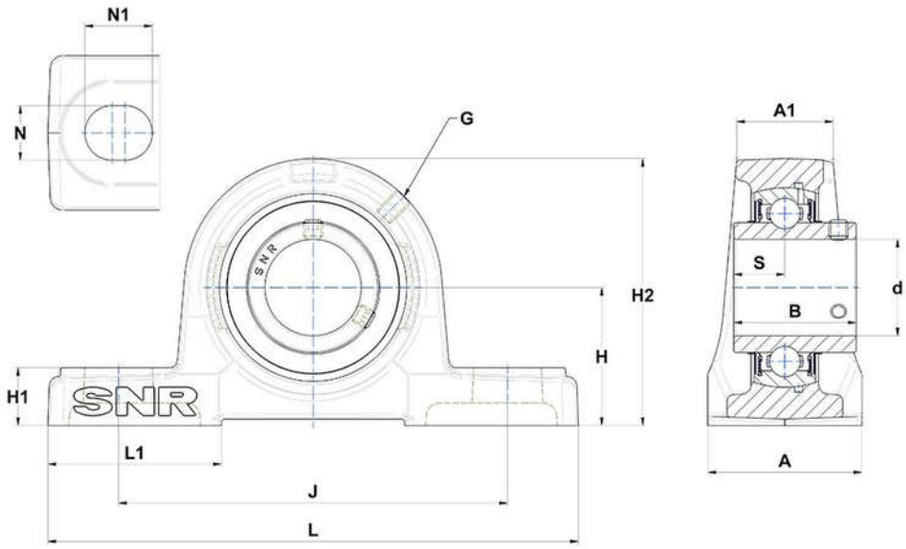

PRODUCT DEFINITION

Brand	SNR
A - Housing width	120 mm
A1 - Housing top width	75 mm
B - Width of Inner Ring	103 mm
d - Shaft diameter	95 mm
G - Grease fitting	M10x1

PRODUCT DEFINITION	
H - Distance mounting base to centerline spheric. seating diam.	125 mm
H1 - Housing foot height	45 mm
H2 - Housing height	250 mm
J - Mounting holes distance	360 mm
L - Housing length	470 mm
L1 - Housing foot length	125 mm
N - Mounting hole dimension	36 mm
N1 - Mounting hole length	50 mm
S - Distance front side/bearing centre	41 mm

PRODUCT PERFORMANCE	
C - Dynamic load rating	156000000 mN
C0 - Static load rating	122000000 mN
Operating temperature min.	253,15 °K
Operating temperature max.	373,15 °K

OTHER FEATURES	
Mass	30,31 kg
Recommended tightening torque for set screw	64 N-m