E23012

Radar corner reflector

RADAR CORNER REFLECTOR 50

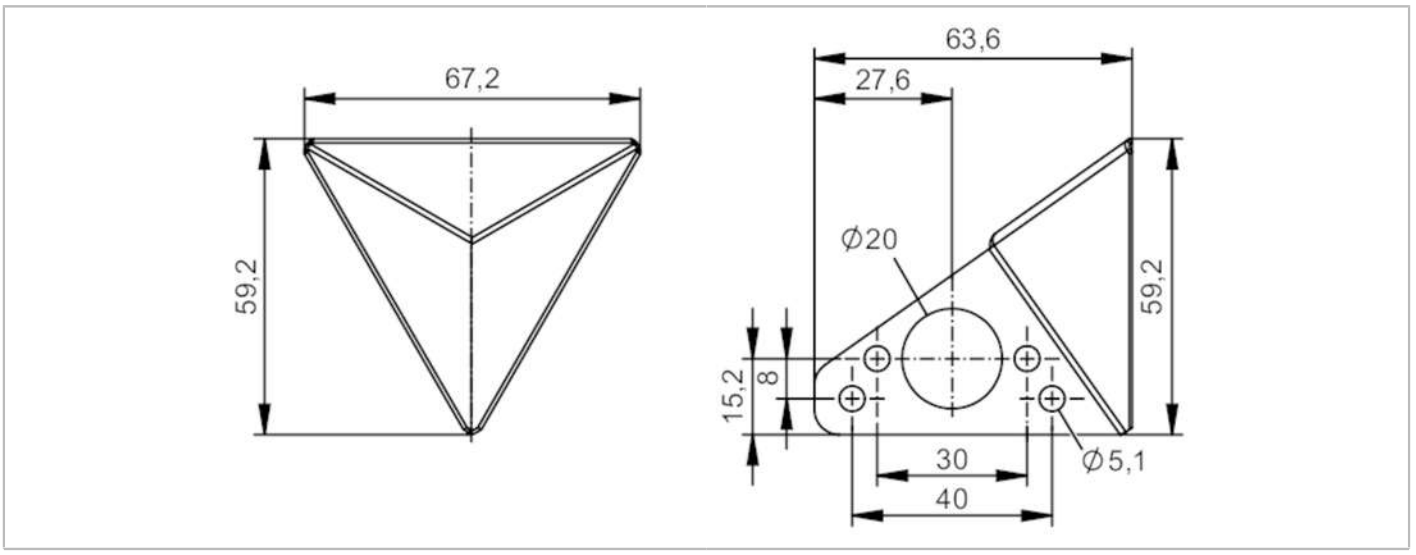

Application		
Design		Winkelreflektor
Mechanical data		
Weight	[g]	60.1
Dimensions	[mm]	63.6 x 59.2 x 67.2
Materials		stainless steel (1.4571/316Ti)
Remarks		
Pack quantity		1 pcs.