Technical data sheet
Polarized retro-reflective photoelectric sensor
Part no.: 50134290
PRK25C.D/4P-200-M12



For Illustration purposes only

Contents

- Technical data
- Dimensioned drawings
- Electrical connection
- Diagrams
- Operation and display
- Reflectors & reflective tapes
- Part number code
- Notes
- Further information
- Accessories

Technical data

Basic data

Series	25C
Operating principle	Reflection principle
Application	Detection of stretch-wrapped objects

Optical data

Operating range	0.05 ... 8 m, With reflector TK(S) 100x100
Operating range	Guaranteed operating range
Operating range limit	0.05 ... 10 m, With reflector TK(S) 100x100
Operating range limit	Typical operating range
Light source	LED, Red
Wavelength	640 nm
Transmitted-signal shape	Pulsed
LED group	Exempt group (in acc. with EN 62471)

Electrical data

Protective circuit	Polarity reversal protection
	Short circuit protected

Performance data

Supply voltage U_B	10 ... 30 V, DC, Incl. residual ripple
Residual ripple	0 ... 15 %, From U_B
Open-circuit current	0 ... 20 mA

Outputs

Number of digital switching outputs	2 Piece(s)

Switching outputs

Voltage type	DC
Switching current, max.	100 mA
Switching voltage	high: ≥(U_B-2.5V)
	low: ≤ 2.5 V

Switching output 1

Assignment	Connection 1, pin 4
Switching element	Transistor, PNP
Switching principle	Light switching

Switching output 2

Assignment	Connection 1, pin 2
Switching element	Transistor, PNP
Switching principle	Dark switching

Time behavior

Switching frequency	1,500 Hz
Response time	0.33 ms
Readiness delay	300 ms

Connection 1

Function	Signal OUT
	Voltage supply
Type of connection	Cable with connector
Cable length	200 mm
Sheathing material	PUR
Cable color	Black
Wire cross section	0.2 mm²
Thread size	M12
Type	Male
Material	PUR
No. of pins	4 -pin
Encoding	A-coded

Mechanical data

Dimension (W x H x L)	15 mm x 42.7 mm x 30 mm
Housing material	Plastic
Plastic housing	ABS
Lens cover material	Plastic
Net weight	33 g
Housing color	Red
Type of fastening	Through-hole mounting with M4 thread
	Via optional mounting device
Compatibility of materials	ECOLAB

Operation and display

Type of display	LED
Number of LEDs	2 Piece(s)

Environmental data

Ambient temperature, operation	-40 ... 60 °C
Ambient temperature, storage	-40 ... 70 °C

Certifications

Degree of protection	IP 67
	IP 69K
Protection class	III
Approvals	c UL US
Standards applied	IEC 60947-5-2

Classification

Customs tariff number	85365019
ECLASS 5.1.4	27270902
ECLASS 8.0	27270902
ECLASS 9.0	27270902
ECLASS 10.0	27270902
ECLASS 11.0	27270902
ECLASS 12.0	27270902
ECLASS 13.0	27270902
ECLASS 14.0	27270902
ECLASS 15.0	27270902
ETIM 5.0	EC002717
ETIM 6.0	EC002717
ETIM 7.0	EC002717
ETIM 8.0	EC002717
ETIM 9.0	EC002717
ETIM 10.0	EC002717

Dimensioned drawings

All dimensions in millimeters

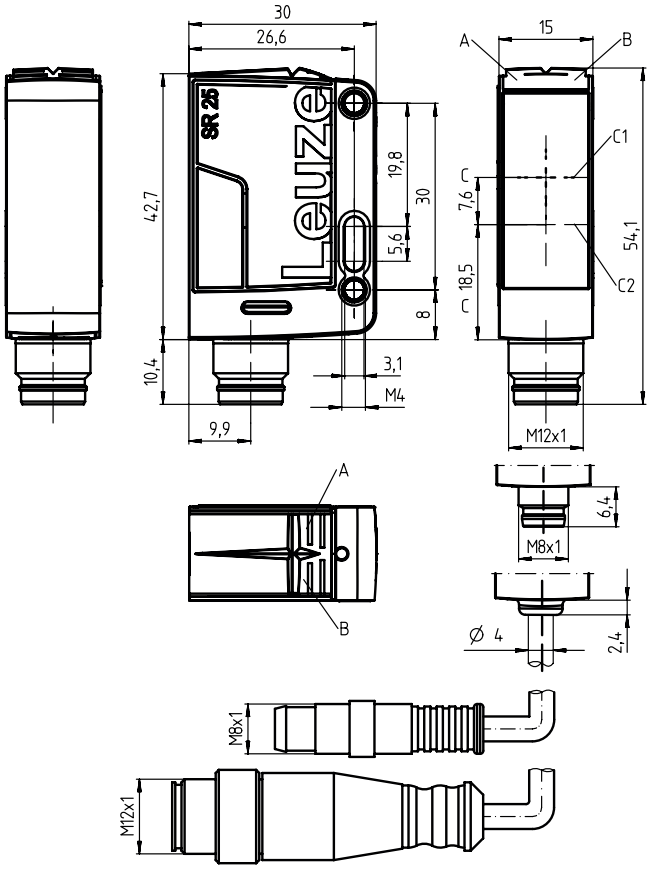

A Green LED
B Yellow LED
C Optical axis
C1 Receiver
C2 Transmitter

Electrical connection

Connection 1

Function	Signal OUT
	Voltage supply
Type of connection	Cable with connector
Cable length	200 mm
Sheathing material	PUR
Cable color	Black
Wire cross section	0.2 mm²
Thread size	M12
Type	Male
Material	PUR
No. of pins	4 -pin
Encoding	A-coded

Pin	Pin assignment
1	V+
2	OUT 2
3	GND
4	OUT 1

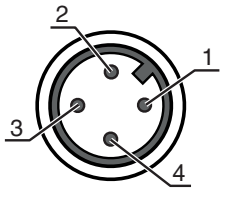

Diagrams

Typ. response behavior (TKS100x100)

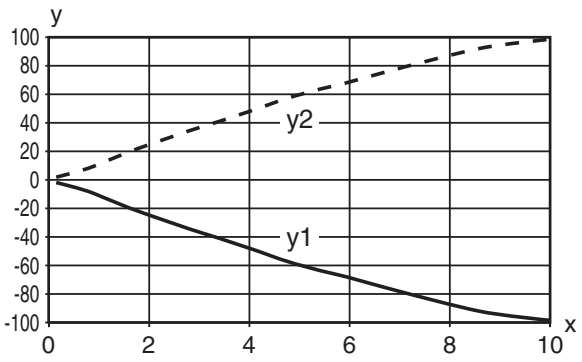

x Distance [m]
y Misalignment [mm]

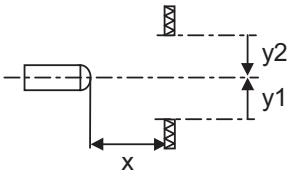

Typ. function reserve

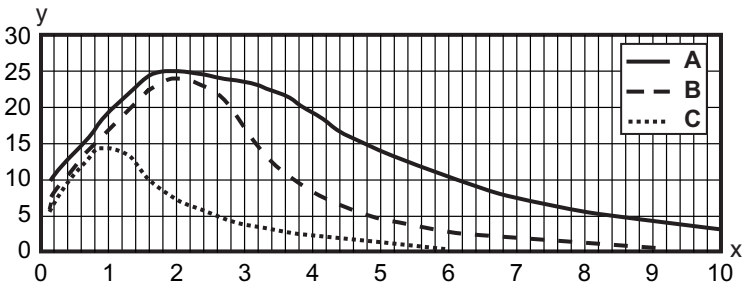

x Distance [m]
y Function reserve

A TKS 100x100
B TKS 40x60
C TKS 20x40

Operation and display

LED	Display	Meaning
1	Green, continuous light	Operational readiness
2	Yellow, continuous light	Light path free
	Yellow, flashing	Light path free, no function reserve

Reflectors & reflective tapes

	Part no.	Designation	Operating range Operating range limit	Description
	50117583	MTKS 50x50.1	0.3 ... 5 m 0.22 ... 6 m	Design: Rectangular Triple reflector size: 1.2 mm Reflective surface: 50 mm x 50 mm Material: Plastic Base material: Plastic Chemical designation of the material: PMMA8N Fastening: Through-hole mounting, Adhesive

Reflectors & reflective tapes

	Part no.	Designation	Operating range Operating range limit	Description
	50106119	REF 4-A-100x100	0.25 ... 2 m 0.2 ... 2.5 m	Design: Rectangular Reflective surface: 100 mm x 100 mm Material: Plastic Chemical designation of the material: PMMA Fastening: Self-adhesive
	50110192	REF 6-A-50x50	0.13 ... 3.5 m 0.1 ... 4 m	Design: Rectangular Triple reflector size: 0.3 mm Reflective surface: 50 mm x 50 mm Material: Plastic Chemical designation of the material: PMMA Fastening: Self-adhesive
	50003192	TK 100x100	0.07 ... 8 m 0.05 ... 10 m	Design: Rectangular Triple reflector size: 4 mm Reflective surface: 96 mm x 96 mm Material: Plastic Base material: Plastic Chemical designation of the material: PMMA8N Fastening: Rear side can be glued
	50022816	TKS 100X100	0.07 ... 8 m 0.05 ... 10 m	Design: Rectangular Triple reflector size: 4 mm Reflective surface: 96 mm x 96 mm Material: Plastic Base material: Plastic Chemical designation of the material: PMMA8N Fastening: Through-hole mounting, Adhesive
	50081283	TKS 20X40	0.12 ... 2.5 m 0.08 ... 3 m	Design: Rectangular Triple reflector size: 2.3 mm Reflective surface: 16 mm x 38 mm Material: Plastic Base material: Plastic Chemical designation of the material: PMMA8N Fastening: Through-hole mounting, Adhesive
	50040820	TKS 40X60	0.08 ... 4 m 0.06 ... 5 m	Design: Rectangular Triple reflector size: 4 mm Reflective surface: 37 mm x 56 mm Material: Plastic Base material: Plastic Chemical designation of the material: PMMA8N Fastening: Through-hole mounting, Adhesive

Part number code

Part designation: **AAA25C d EE-f.GGH/iJ-K**

AAA25C	**Operating principle / construction** HT25C: Diffuse reflection sensor with background suppression PRK25C: Retro-reflective photoelectric sensor with polarization filter LS25C: Throughbeam photoelectric sensor transmitter LE25C: Throughbeam photoelectric sensor receiver DRT25C: Dynamic reference diffuse sensor
d	**Light type** n/a: red light I: infrared light
EE	**Light source** n/a: LED PP: Power PinPoint LED L1: laser class 1 L2: laser class 2

Part number code

f	**Preset range (optional)** n/a: operating range acc. to data sheet xxxF: Preset range [mm]
GG	**Equipment** A: Autocollimation principle (single lens) S: small light spot D: Detection of stretch-wrapped objects X: extended model HF: Suppression of HF illumination (LED) XL: Extra long light spot T: autocollimation principle (single lens) for highly transparent bottles without tracking TT: autocollimation principle (single lens) for highly transparent bottles with tracking F: Foreground suppression R: greater operating range SL: Slit diaphragm
H	**Operating range adjustment** 1: 270° potentiometer 2: multiturn potentiometer 3: teach-in via button R: greater operating range
i	**Switching output/function OUT 1/IN: Pin 4 or black conductor** 2: NPN transistor output, light switching N: NPN transistor output, dark switching 4: PNP transistor output, light switching P: PNP transistor output, dark switching X: pin not used 8: activation input (activation with high signal) L: IO-Link interface (SIO mode: PNP light switching, NPN dark switching) 6: push-pull switching output, PNP light switching, NPN dark switching G: Push-pull switching output, PNP dark switching, NPN light switching
J	**Switching output / function OUT 2/IN: pin 2 or white conductor** 2: NPN transistor output, light switching N: NPN transistor output, dark switching 4: PNP transistor output, light switching P: PNP transistor output, dark switching W: warning output X: pin not used 6: push-pull switching output, PNP light switching, NPN dark switching T: teach-in via cable G: Push-pull switching output, PNP dark switching, NPN light switching 8: activation input (activation with high signal)
K	**Electrical connection** n/a: cable, standard length 2000 mm, 4-wire 200-M12: cable, length 200 mm with M12 connector, 4-pin, axial (plug) M8: M8 connector, 4-pin (plug) M12: M12 connector, 4-pin (plug) 200-M8: cable, length 200 mm with M8 connector, 4-pin, axial (plug) M8.1: Snap-in, M8 connector, 4-pin (plug)

Note

- A list with all available device types can be found on the Leuze website at www.leuze.com.

Notes

Observe intended use!

- This product is not a safety sensor and is not intended as personnel protection.
- The product may only be put into operation by competent persons.
- Only use the product in accordance with its intended use.

Further information

- Light source: Average life expectancy 100,000 h at an ambient temperature of 25 °C
- Sum of the output currents for both outputs 100 mA
- Use in safety-relevant applications in accordance with EN ISO 13849-1:2015, e.g. muting, protective field switchover of safety laser scanners

Accessories

Connection technology - Connection cables

	Part no.	Designation	Article	Description
	50130652	KD U-M12-4A-V1-050	Connection cable	Connection 1: Connector, M12, Axial, Female, A-coded, 4 -pin Connector, LED: No Connection 2: Open end Shielded: No Cable length: 5.000 mm Sheathing material: PVC
	50130690	KD U-M12-4W-V1-050	Connection cable	Connection 1: Connector, M12, Angled, Female, A-coded, 4 -pin Connector, LED: No Connection 2: Open end Shielded: No Cable length: 5.000 mm Sheathing material: PVC

Mounting technology - Mounting brackets

	Part no.	Designation	Article	Description
	50118543	BT 300M.5	Mounting bracket	Design of mounting device: Angle, L-shape Fastening, at system: Through-hole mounting Mounting bracket, at device: Screw type, Suited for M4 screws Type of mounting device: Adjustable Material: Stainless steel

Mounting technology - Rod mounts

	Part no.	Designation	Article	Description
	50117829	BTP 200M-D12	Mounting system	Design of mounting device: Protection hood Fastening, at system: For 12 mm rod Mounting bracket, at device: Screw type Type of mounting device: Clampable, Adjustable, Turning, 360° Material: Metal
	50117252	BTU 300M-D12	Mounting system	Design of mounting device: Mounting system Fastening, at system: For 12 mm rod, Sheet-metal mounting Mounting bracket, at device: Screw type, Suited for M4 screws Type of mounting device: Clampable, Adjustable, Turning, 360° Material: Metal

Accessories

Standard reflectors

	Part no.	Designation	Article	Description
	50108300	REF 4-A-50x50	Reflective tape	Design: Rectangular Reflective surface: 50 mm x 50 mm Material: Plastic Chemical designation of the material: PMMA Fastening: Self-adhesive
	50081283	TKS 20X40	Reflector	Design: Rectangular Triple reflector size: 2.3 mm Reflective surface: 16 mm x 38 mm Material: Plastic Base material: Plastic Chemical designation of the material: PMMA8N Fastening: Through-hole mounting, Adhesive
	50040820	TKS 40X60	Reflector	Design: Rectangular Triple reflector size: 4 mm Reflective surface: 37 mm x 56 mm Material: Plastic Base material: Plastic Chemical designation of the material: PMMA8N Fastening: Through-hole mounting, Adhesive

Note

A list with all available accessories can be found on the Leuze website in the Download tab of the article detailed page.