ROLINE Cable Cover Organizer, Under Desk Mount (2 pieces), white

Product No.	17.03.1304
Manufacturer	ROLINE
Manufacturer No.	17.03.1304
EAN (single piece)	7630049617643


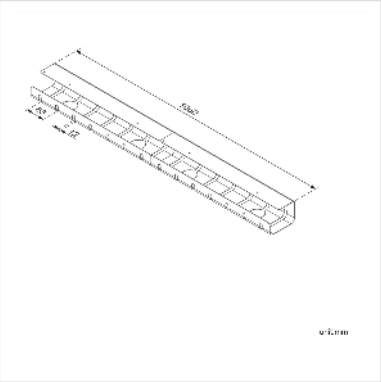


- Desktop cable tray organizer
- Simple design: hides wire and power cords for a clean workspace
- Manage all cables: enough room for power stripes, network, and computer cabling
- Easy installation

Technical specifications	
Manufacturer	ROLINE
Product group	Furniture
Product type	Cable management system
Colour	white
Length	106 cm
Scope of delivery	2x cable manager à 530 x 110 x 80 mm
Height	80 mm
Width	110 mm
Depth	1060 mm
Weight	2206.5 g
Height of packaging (single piece)	100 mm

Width of packaging (single piece)	130 mm
Depth of packaging (single piece)	540 mm
Package weight (single piece)	2.5 kg