# Product datasheet

Specifications



## inductive sensor XS8 40x40x117 - PBT - Sn20 mm - 12..48VDC - terminals

XS8C4A1PCN12

## Main

| | |
|---|---|
| **Range of product** | Telemecanique Inductive proximity sensors XS |
| **Series name** | General purpose |
| **Sensor type** | Inductive proximity sensor |
| **Device application** | Mobile equipment |
| **Sensor name** | XS8 |
| **Sensor design** | Form 40 x 40 x 117 |
| **Size** | 117 mm |
| **Body type** | Fixed |
| **Detector flush mounting acceptance** | Flush mountable |
| **Material** | Plastic |
| **Enclosure material** | PBT |
| **Type of output signal** | Discrete |
| **Wiring technique** | 4-wire |
| **[Sn] nominal sensing distance** | 20 mm |
| **Discrete output function** | 1 NO + 1 NC |
| **Output circuit type** | DC |
| **Discrete output type** | PNP |
| **Electrical connection** | Screw-clamp terminals, 4 x 1.5 mm² |
| **[Us] rated supply voltage** | 12...48 V DC with reverse polarity protection |
| **Switching capacity in mA** | <= 200 mA with overload and short-circuit protection |
| **IP degree of protection** | IP67 conforming to IEC 60529<br>IP65 conforming to IEC 60529<br>IP69K conforming to DIN 40050 |

## Complementary

| | |
|---|---|
| **Safety level** | SIL 2 conforming to EN/IEC 61508<br>PL = d conforming to EN/ISO 13849-1<br>SILCL 2 conforming to IEC 62061 |
| **Safety reliability data** | MTTFd = 1546 years<br>PFHd = 7.4E-8 1/h<br>SFF = 92 %<br>DC = 75 % with appropriate safety controller |

Disclaimer: This documentation is not intended as a substitute for and is not to be used for determining suitability or reliability of these products for specific user applications

| | |
|---|---|
| **Detection face** | 5 positions turret head |
| **Front material** | PBT |
| **Operating zone** | 0…16 mm |
| **Differential travel** | 3...15% of Sr |
| **Repeat accuracy** | <= 3% of Sr |
| **Cable entry number** | 1 tapped entry for 1/2" NPT cable gland |
| **Status LED** | Supply on: 1 LED (green)<br>Output state: 1 LED (yellow) |
| **Supply voltage limits** | 10…58 V DC |
| **Switching frequency** | <= 300 Hz |
| **Maximum voltage drop** | <2 V (closed) |
| **Current consumption** | 0...15 mA no-load |
| **Maximum delay first up** | 7.5 ms |
| **Maximum delay response** | 1.2 ms |
| **Maximum delay recovery** | 1.8 ms |
| **Marking** | CE |
| **Height** | 40 mm |
| **Length** | 40 mm |
| **Width** | 117 mm |
| **Net weight** | 0.244 kg |

## Environment

| | |
|---|---|
| **Product certifications** | TÜV<br>CSA<br>UL<br>E2<br>CCC |
| **Ambient air temperature for operation** | -25…70 °C |
| **Ambient air temperature for storage** | -40…85 °C |
| **Vibration resistance** | 25 gn amplitude = +/- 2 mm (f = 10…55 Hz) conforming to IEC 60068-2-6 |
| **Shock resistance** | 50 gn for 11 ms conforming to EN 60068-2-27 |

## Packing Units

| | |
|---|---|
| **Unit Type of Package 1** | PCE |
| **Number of Units in Package 1** | 1 |
| **Package 1 Weight** | 248.0 g |
| **Package 1 Height** | 4.8 cm |
| **Package 1 width** | 5 cm |
| **Package 1 Length** | 14 cm |
| **Unit Type of Package 2** | S02 |
| **Number of Units in Package 2** | 14 |
| **Package 2 Weight** | 3.846 kg |
| **Package 2 Height** | 15 cm |
| **Package 2 width** | 30 cm |
| **Package 2 Length** | 40 cm |

## Offer Sustainability

| | |
|---|---|
| **Sustainable offer status** | Green Premium product |
| **REACh Regulation** | REACh Declaration |
| **EU RoHS Directive** | Pro-active compliance (Product out of EU RoHS legal scope)<br>EU RoHS Declaration |
| **Mercury free** | Yes |
| **RoHS exemption information** | Yes |
| **Environmental Disclosure** | Product Environmental Profile |

## Contractual warranty

| | |
|---|---|
| **Warranty** | 18 months |

# Product datasheet XS8C4A1PCN12

Dimensions Drawings

## Dimensions

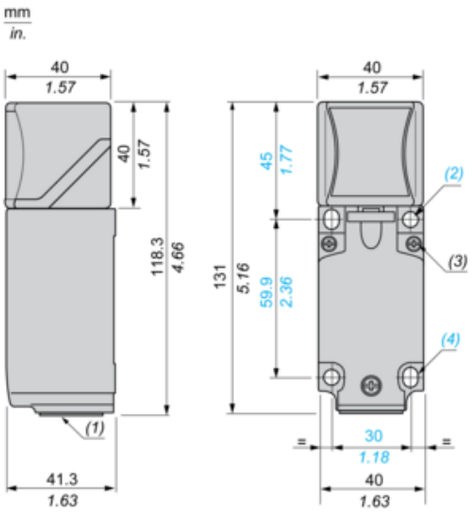


**(1) :** 1/2" NPT cable gland.

**(2) :** 2 holes Ø 5,45 mm / Ø 0.21 in. Tightening torque: < 1,5 Nm / < 13.3 lb-in.

**(3) :** 3 screws M3,5. Tightening torque: < 1,2 Nm / < 10.6 lb-in.

**(4) :** 2 alongated holes 5,4 x 7,4 mm / 0.21 x 0.29 in. Tightening torque: < 1,5 Nm / < 13.3 lb-in".

## Mounting

### Head Positions

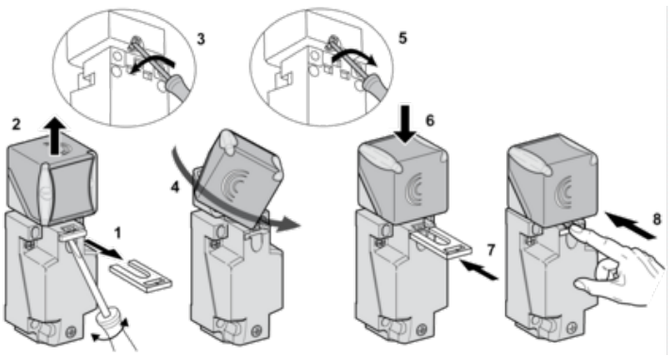

## Setting-up Precautions

### Minimum Mounting Distances (mm)

**Side by Side**

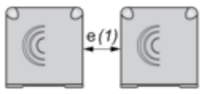


**e (1) ≥** 80

**Face to Face**

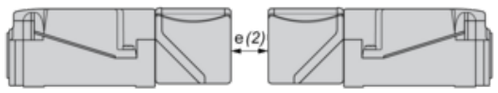


**e (2) ≥** 160

**Facing a Metal Object**

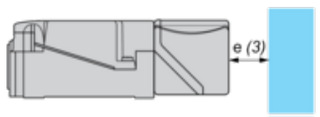


**e (3) ≥** 60

## Wiring Schemes

### 4-Wire DC

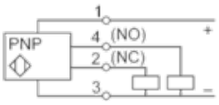

## SIL 2 Wiring Scheme

### With Preventa XPSMF40 Safety PLC

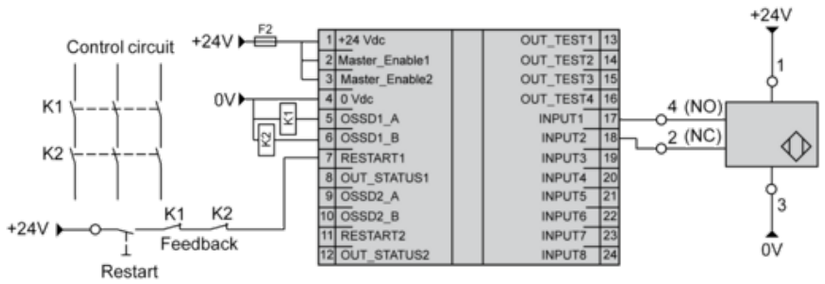


**SFF :** (Safe Failure Fraction): 92,68 %

**DC :** (Diagnosis Coverage): 75,8 %