VARIMETER EX
Thermistor Motor Protection Relay
MK 9163N

0245068



Function Diagram

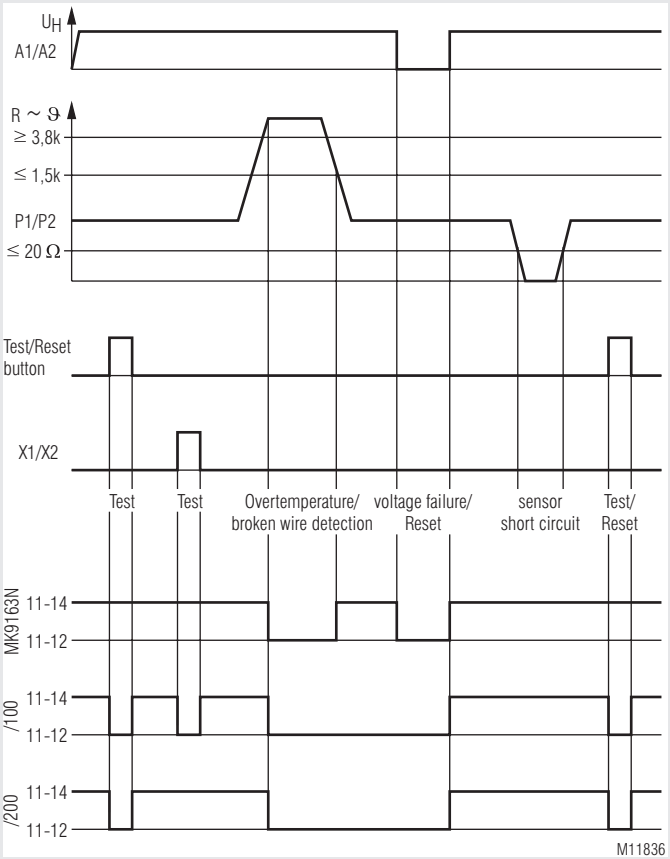

Your advantages
- Reliable temperature monitoring of motors
- Rapid fault location

Features
- According to EN 60947-5-1, EN 60947-8
- Monitioring of
  - overtemperature
  - broken wire detection in sensor circuit
  - short circuit detection in sensor circuit
- 1 input for 1 to 6 PTC-resistors
- De-energized on trip
- LED-indicator for
  - auxiliary supply
  - state of contact
- Output with 2 changeover contacts
- As option with manual reset, internal reset button and external remote reset X1/X2
- Wire connection: also 2 x 1.5 mm² stranded ferruled, or 2 x 2.5 mm² solid DIN 46 228-1/-2/-3/-4
- As option with pluggable terminal blocks for easy exchange of devices
  - with screw terminals
  - or with cage clamp terminals
- Width 22.5 mm

Approvals and Markings

A025518

[1] Approval not for all variants; on request

Applications

- To protect against thermal overload of motors caused by high switching frequency, havy duty starting, phase failure on one phase, bad cooling, high ambient temperature
- Temperature monitoring of bearings, transmissions, oil and cooling liquids.

Function

If one of the sensors in the measuring circuit reaches the response temperature (or broken wire is detected), the device indicates failure. This failure is stored in the device with manual reset, even if the temperature goes back to normal. The unit can be reset by pressing the Test/Reset button, by bridging X1/X2 for a short moment or by disconnecting the auxiliary supply for a short time.
Test/Reset button:
Besides the reset function this button provides in normal operation a test facility. The unit indicates fault as long as the button is activated (see also under "Variants").

All technical data in this list relate to the state at the moment of edition. We reserve the right for technical improvements and changes at any time.

Circuit Diagrams

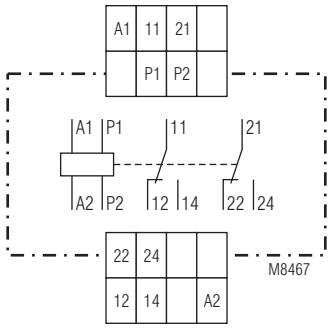

MK 9163N.12

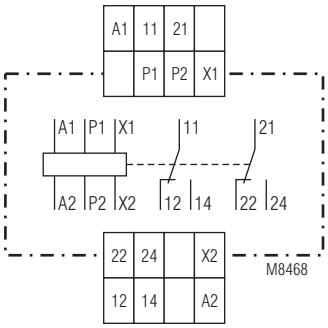

MK 9163N.12/100, MK 9163N.12/200

Connection Terminals

Terminal designation	Signal description
A1, A2	operating voltage
P1, P2	Thermistor input
X1, X2	External remote reset
11, 12, 14; 21, 22, 24	Changeover contacts

Indicators

green LED: on, when auxiliary supply connected
red LED: on, when overtemperature or broken wire, short circuit is detected

Technical Data

Input Circuit

Response value: 3.2 ... 3.8 kΩ
Release value: 1.5 ... 1.8 kΩ
Broken wire detection: > 3.8 kΩ
Short circuit on measuring circuit: < 20 Ω
Loading of measuring circuit: < 5 mW (bei R = 1.5 kΩ)
Measuring voltage: ≤ 2 V (bei R = 1.5 kΩ)

Auxiliary Circuit

Auxiliary voltage U_H: AC/DC 24 V
AC 110, 230, 400 V 50 / 60 Hz
Voltage range: AC 0.8 ... 1.1 U_H
at 10 % residual ripple: DC 0.9 ... 1.25 U_H
at 48 % residual ripple: DC 0.8 ... 1.1 U_H
Nominal consumption: AC: 1.5 VA
DC: 0.85 W
Nominal frequency: 50 / 60 Hz
Frequency range: 45 ... 65 Hz
Max. bridging time on failure of aux. supply: 20 ms
Operate delay: < 40 ms
Release delay: < 100 ms

External Remote Reset X1/X2

Function: External remote reset X1/X2 with NO contact (voltage free)
Remark: This input is not galvanic separated from measuring input P1/P2

Output

Contacts: 2 changeover contacts
Thermal current I_{th}: 5 A
Switching capacity
to AC 15
NO contacts: 2 A / AC 230 V IEC/EN 60 947-5-1
NC contacts: 1 A / AC 230 V IEC/EN 60 947-5-1
to DC 13: 1 A / DC 24 V IEC/EN 60 947-5-1
Electrical life
at 4 A, AC 230 V, cosφ = 0.6: 1.5 x 10^6 switching cycles
Short-circuit strength IEC/EN 60 947-5-1
NC contact:
max. fuse rating: 6 A gG / gL
NO contact:
max. fuse rating: 10 A gG / gL
Mechanical life: ≥ 30 x 10^6 switching cycles

Technical Data

General Data

Operating mode: Continous operation
Temperature range:
Operation: - 20 ... + 60°C
Storage: - 20 ... + 60°C
Altitude: < 2.000 m
Clearance and creepage distances
rated impulse voltage / pollution degree: 4 kV / 2 IEC/EN 60 664-1
EMC IEC/EN 60947-8
Interference suppressions: Limit value class B EN 55 011
Degree of protection
Housing: IP 40 IEC/EN 60 529
Terminals: IP 20 IEC/EN 60 529
Housing: Thermoplastic with V0-behaviour according to UL subject 94
Vibration resistance: Amplitude 0.2 mm, frequency 10 ... 55 Hz, IEC/EN 60 068-2-6
Climate resistance: 20 / 060 / 04 IEC/EN 60 068-1
Terminal designation: EN 50 005
Wire connection DIN 46 228-1/-2/-3/-4
Screw terminals (integrated): 1 x 4 mm^2 solid or
1 x 2.5 mm^2 stranded ferruled or
2 x 1.5 mm^2 stranded ferruled or
2 x 2.5 mm^2 solid
Insulation of wires or sleeve length: 8 mm
Plug in with screw terminals
max. cross section for connection: 1 x 2.5 mm^2 solid or
1 x 2.5 mm^2 stranded ferruled
Insulation of wires or sleeve length: 8 mm
Plug in with cage clamp terminals
max. cross section for connection: 1 x 4 mm^2 solid or
1 x 2.5 mm^2 stranded ferruled
min. cross section for connection: 0.5 mm^2
Insulation of wires or sleeve length: 12 $^{\pm 0.5}$ mm
Wire fixing: Plus-minus terminal screws M 3.5 box terminals with wire protection or cage clamp terminals
Fixing torque: max. 0.8 Nm
Mounting: DIN rail IEC/EN 60 715
Weight: 160 g

Dimensions

Width x height x depth
MK 9163N: 22.5 x 90 x 102 mm
MK 9163N PC: 22.5 x 111 x 102 mm
MK 9163N PS: 22.5 x 104 x 102 mm

CCC-Data

Thermal current I_{th}: 4 A

Switching capacity
to AC 15: 1,5 A / AC 230 V IEC/EN 60 947-5-1
to DC 13: 1 A / DC 24 V IEC/EN 60 947-5-1

Technical data that is not stated in the CCC-Data, can be found in the technical data section.

Standard Type

MK9163N.12/100 AC230 V 50/60 Hz
Article number: 0054097
- with Test/Reset button
- Output: 2 changeover contacts
- Nominal voltage U_N: AC 230 V
- Width: 22.5 mm

Variants

MK 9163N.12 / _ _ _

- 0 free
- 0 without short circuit detection
- 0 without RESET
- 1 with RESET and test function via built in button and X1/X2
- 2 with RESET and test function via built in button, at X1/X2 RESET function only

Available variants
MK 9163N.12
MK 9163N.12/100
MK 9163N.12/200

Ordering example for variants

MK 9163N .12 _ _ / _ _ _ AC/DC 230 V 50/60 Hz

- Nominal frequency
- Nominal voltage
- Variant, if required
- Type of terminals
  without indication:
  terminal blocks fixed, with screw terminals
  PC (plug in cage clamp):
  pluggable terminal blocks with cage clamp terminals
  PS (plug in screw):
  pluggable terminal blocks with screw terminals
- Contacts
- Type

Options with Pluggable Terminal Blocks



Screw terminal
(PS/plugin screw)



Cage clamp terminal
(PC/plugin cage clamp)

Notes

Removing the terminal blocks with cage clamp terminals

1. The unit has to be disconnected.
2. Insert a screwdriver in the side recess of the front plate.
3. Turn the screwdriver to the right and left.
4. Please note that the terminal blocks have to be mounted on the belonging plug in terminations.

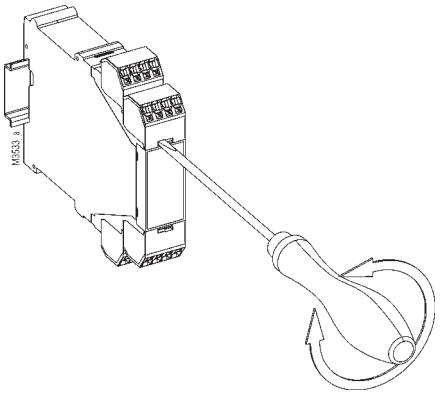

Additional Remarks

Installation
The DC 24 V version has no galvanic separation between auxiliary supply (A1, A2) and the sensor circuit (P_1, P_2). These units are only allowed to be connected to transformers according to DIN EN 61 558 or to battery supply.

Wiring
The sensor and control wires have to be installed separately from the motor wires. When strong inductive or capacitve influence is expected from parallel installed high courrent wires, screened wire should be used.

Wire length
The max. wire length of the sensor circuit is:

Diameter (mm²):	4	2.5	1.5	0.5
max. wire length (m):	2 x 550	2 x 250	2 x 150	2 x 50

Application Example

