UNITRONIC® SPIRAL
made of UNITRONIC® LiYD11Y

DB73220200
valid from: 11.01.2016

Application

UNITRONIC® SPIRAL cables are used wherever screened cables with smallest dimensions are required, e.g. in measuring and controlling engineering. UNITRONIC® SPIRAL cables have an overall screening, which defends interferences and guarantees accurate pulse transmission.
High flexibility affords extended lengths of up to 4 times the unextended spiral length.
UNITRONIC® LiYD11Y is a flexible data cable for weak-current applications. The cut resistant polyurethane outer sheath is largely resistant to the action of acids, caustic solutions and certain oils, and to abrasion.
UNITRONIC® LiYD11Y is intended for use in dry and damp interiors.

Dimensions

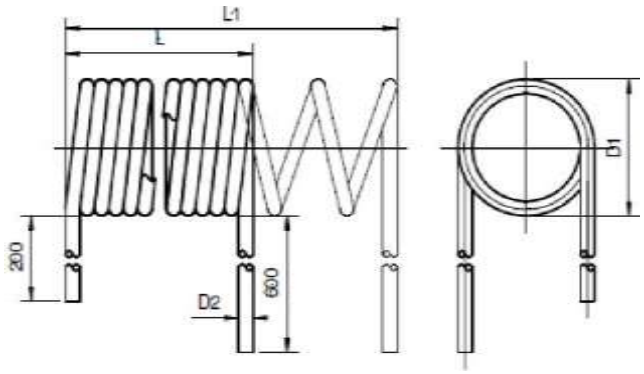

L: Unextended spiral length
L1: Max. extended length of spiral
D1: Approx. Outer diameter of spiral
D2: Approx. Outer diameter of cable

Length of extended ends:
First end: 200 mm
Second end: 600 mm

Technical data

Design	based on VDE 0812
Conductor	extra fine wire strands of bare copper acc. to IEC 60228 resp. VDE 0295, class 6
Core insulation	PVC compound TI2 acc. to EN 50363-3 resp. VDE 0207-363-3
Core identification	according to DIN 47100
Screening	wrapped with bare copper wires
Outer sheath	PUR compound TMPU according to EN 50363-10-2 resp. VDE 0207-363-10-2 colour: black, similar to RAL 9005

Electrical properties at 20°C

Rated voltage	250 V (not for power applications)
Test voltage	1200V

Mechanical and thermal properties

Temperature range	flexible use: -5°C up to +50°C
EU-Directives	meets European RoHS Directive 2011/65/EU

All rights reserved acc. to DIN ISO 16016.