Cone/CAB Mounts - Type CN



Applications

- Gensets
- Engines
- Pumps
- Special Equipment
- HVAC

The CN range of mounts offer a high level of insulation - especially useful for isolating cabs of trucks, bus engines, radiators etc.

They have a particular rubber section made for shear and compression stresses which allos for good axial deflection.

The Mounts are supplied and fitted with two safety washers to minimise damage under overload conditions.

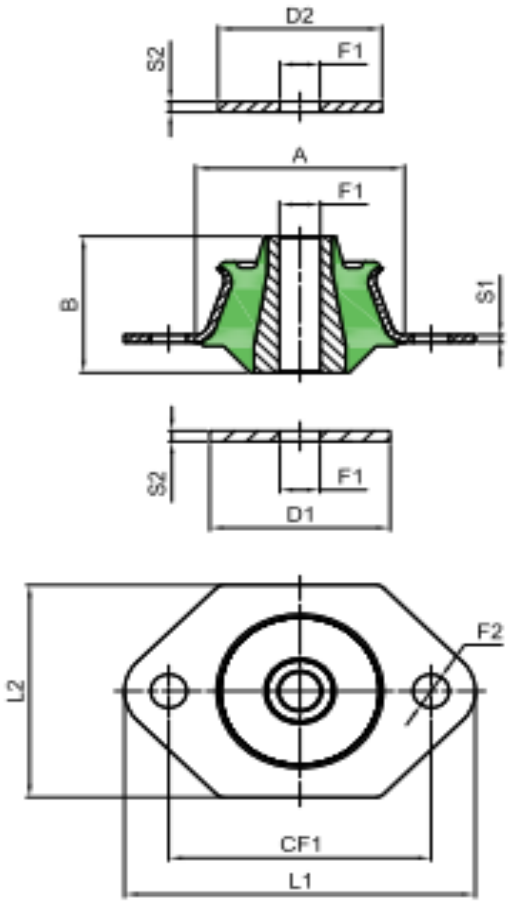

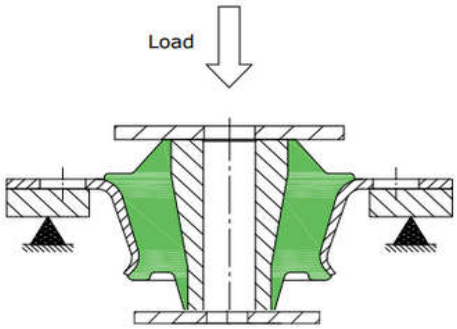

RS Ref:	Fibet Ref:	Hardness (IRHD)	A (mm)	B (mm)	CF1 (mm)	L1 (mm)	L2 (mm)	F1 (mm)	S1 (mm)	F2 (mm)	D1 (mm)	D2 (mm)	F1 (mm)	S2 (mm)	Average Stiffness (daN/mm)	Maximum Load (daN)	Maximum Deflection (mm)
T.B.A.	C6051CN12W	45	60	45	80	107	68	12.1	2.5	11	55	50	12.2	3.5	20.0	100.0	5.0
T.B.A.	C6051CN12M	60													34.0	170.0	
T.B.A.	C6051CN12H	60													50.0	250.0	