**JUMO GmbH & Co. KG**
Delivery address: Mackenrodtstraße 14
36039 Fulda, Germany
Postal address: 36035 Fulda, Germany
Phone: +49 661 6003-0
Fax: +49 661 6003-607
Email: mail@jumo.net
Internet: www.jumo.net

**JUMO Instrument Co. Ltd.**
JUMO House
Temple Bank, Riverway
Harlow, Essex, CM20 2DY, UK
Phone: +44 1279 63 55 33
Fax: +44 1279 62 50 29
Email: sales@jumo.co.uk
Internet: www.jumo.co.uk

**JUMO Process Control, Inc.**
6724 Joy Road
East Syracuse, NY 13057, USA
Phone: +1 315 437 5866
Fax: +1 315 437 5860
Email: info.us@jumo.net
Internet: www.jumousa.com



# Hot Air Thermostats WTHc

## Special features

- With microswitch
- Device combination consisting of 3 individual devices
- Protection class IP40 or IP54
- Tested according to DIN EN 14597

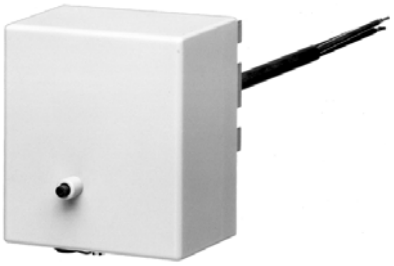

**Typ 604514/2280-...**



**Typ 604514/2280-.../402**

## Brief description

Thermostats are used to control and monitor thermal processes.

The thermostats of the WTHc series are suitable for the use in hot air systems according to DIN 4794 and consist of 3 separate measuring and switching systems with the following functions: temperature controller TR, temperature monitor TW, and safety temperature limiter STB.

In the event of a malfunction, the STB switches the monitored machine line to an operational safe status.

Hot air thermostats operate according to the fluid expansion principle. The electrical switching elements are microswitches.

## Switching functions

### Temperature controller TR and temperature monitor TW

If the temperature on the temperature probe exceeds the setpoint value, the microswitch is activated by the transmission mechanics and the electrical circuit is opened or closed. If the temperature falls below the selected setpoint value (by the amount of the switching differential), the microswitch is reset to its initial position.

### Temperature monitor TW and safety temperature limiter STB

The microswitch can be manually unlocked once the dangerous temperature drops by approx. 10 K. The microswitch can be manually unlocked once the dangerous temperature drops by approx. 10 K.

### Self-monitoring for the safety temperature limiter STB

If the measuring system is destroyed (i.e. if the expansion fluid escapes) the pressure in the membrane of the STB drops and permanently opens the electrical circuit. Unlocking is then no longer possible. The electrical circuit opens when cooling the probe of STB down to the negative temperature range, but it then closes again if the temperature unlocks itself automatically.

## Approvals and approval marks (see technical data)

**JUMO GmbH & Co. KG**
Delivery address: Mackenrodtstraße 14
36039 Fulda, Germany
Postal address: 36035 Fulda, Germany
Phone: +49 661 6003-0
Fax: +49 661 6003-607
Email: mail@jumo.net
Internet: www.jumo.net

**JUMO Instrument Co. Ltd.**
JUMO House
Temple Bank, Riverway
Harlow, Essex, CM20 2DY, UK
Phone: +44 1279 63 55 33
Fax: +44 1279 62 50 29
Email: sales@jumo.co.uk
Internet: www.jumo.co.uk

**JUMO Process Control, Inc.**
6724 Joy Road
East Syracuse, NY 13057, USA
Phone: +1 315 437 5866
Fax: +1 315 437 5860
Email: info.us@jumo.net
Internet: www.jumousa.com



# Technical data

## Control ranges and limit values

| Control range/limit value | Ventilator controller TR | Burner monitor TW | Safety temperature limiter STB |
|---|---|---|---|
| | TR system 2 | TW system 2 | STB system |
| | 20 to 80 °C | 70 to 90 °C | Limit value 100 °C |

## Capillary and temperature probe

| | |
|---|---|
| Capillary | |
| Material | Copper (Cu), material no. 2.0090 |
| Diameter | Ø 1.5 mm |
| Capillary length including probe | 350 mm with support tube, 1,250 mm without support tube[a] |
| Minimum bending radius | 5 mm |
| Temperature probe | |
| Material | Copper (Cu), material no. 2.0090, hard soldered |
| Diameter | 3 probes Ø 4 mm |

[a] Probe identification for the version with capillary: ventilator controller TR: red; burner monitor TW: blue

## Electrical data

| Switching function | Ventilator controller TR, burner monitor TW | Safety temperature limiter STB |
|---|---|---|
| | Microswitch with changeover contact | Microswitch with N/C contact, restart lock, and additional signal contact (extra code 574) |
| Maximum contact rating | AC 230 V +10 %, 10(2) A, cos φ = 1(0.6)<br>DC 230 V +10 %, 0.25 A | |
| Electrical connection | The electrical connection can be reached via the terminal strip after removing the case lid. Temperature controller and terminal rail are mounted to a PCB (epoxy resin glass fabrics) with printed diagram. | |

## Operating data

| | |
|---|---|
| Switching differential | |
| Ventilator controller TR | 14 ±2 K |
| Burner monitor TW | 6 ±1 K |
| Switching point accuracy | |
| Ventilator controller TR | In the upper third of the scale or limit value ±4 K, at the scale beginning ±6 K |
| Burner monitor TW | In the upper third of the scale or limit value ±4 K, at the scale beginning ±4 K |
| Safety temperature limiter STB | In the upper third of the scale or limit value +0/-5 K |
| Ambient temperature influence | |
| On the switching head | 0.35 K/K |
| On the capillary | 0.07 K/K per meter |
| Operating medium | Air |
| Time constant | ≤ 120 s in air |
| Over-temperature security | 200 °C at the temperature probe |
| Admissible storage temperature | -50 to +50 °C |
| Admissible ambient temperature for use | Max. 80 °C |
| Rated position | According to DIN 16257, rated position 0 to rated position 90 (different rated position on request) |

Use the device without a probe thermowell to achieve full response accuracy. Immerse the entire length of the device's temperature probe in the operating medium to be monitored.

**JUMO GmbH & Co. KG**
Delivery address: Mackenrodtstraße 14
36039 Fulda, Germany
Postal address: 36035 Fulda, Germany
Phone: +49 661 6003-0
Fax: +49 661 6003-607
Email: mail@jumo.net
Internet: www.jumo.net

**JUMO Instrument Co. Ltd.**
JUMO House
Temple Bank, Riverway
Harlow, Essex, CM20 2DY, UK
Phone: +44 1279 63 55 33
Fax: +44 1279 62 50 29
Email: sales@jumo.co.uk
Internet: www.jumo.co.uk

**JUMO Process Control, Inc.**
6724 Joy Road
East Syracuse, NY 13057, USA
Phone: +1 315 437 5866
Fax: +1 315 437 5860
Email: info.us@jumo.net
Internet: www.jumousa.com



## Housing

| | |
|---|---|
| Material | |
| Case lid, color | Polycarbonat, pebble gray RAL 7032 |
| Case bottom part, color | Sheet steel, painted;<br>Aluminum die casting, painted, anthracite gray RAL 7015 (extra code 402) |
| Setpoint value setting | |
| Safety temperature limiter STB | The setpoint setting is permanently factory-set. |
| Ventilator controller TR, burner monitor TW | The switching point can be adjusted with a screwdriver after removing the case lid. |

| | |
|---|---|
| Protection type | IP40, according to EN 60529 (standard); IP54, according to EN 60529 (extra code 402) |
| Cable inlet | 2 plug-type sockets; IP54, according to EN 60529 (extra code 402) |
| Mounting of switching head | Fasten the switch head with 2 screws through the case bottom section. |
| | Fasten the switch head to the flange of the support tube with 2 screws, then fix it to the hexagon of the support tube with a screw (extra code 402). |
| Weight | Approx. 700 g |

## Approvals and approval marks

| | |
|---|---|
| DIN | |
| Testing agency | DIN CERTCO/TÜV Süd |
| Certificates/certificate numbers | TR/TW/STB1064 |
| Inspection basis | DIN EN 14597 |
| Valid for | Type 604514 |
| DIN | |
| Testing agency | DIN CERTCO/TÜV Süd |
| Certificates/certificate numbers | TR/TW/STW1205 |
| Inspection basis | DIN EN 14597 |
| Valid for | Type 604514 |
| EAC[a] | |
| Testing agency | Gost Norm AG |
| Certificates/certificate numbers | TC RU C-DE.AB98.B.00348 |
| Inspection basis | Technical rules of the customs union Russia/Belarus/Kazakhstan |
| Valid for | Type 604514 |

[a] Russian documentation available upon request.

**JUMO GmbH & Co. KG**
Delivery address: Mackenrodtstraße 14
36039 Fulda, Germany
Postal address: 36035 Fulda, Germany
Phone: +49 661 6003-0
Fax: +49 661 6003-607
Email: mail@jumo.net
Internet: www.jumo.net

**JUMO Instrument Co. Ltd.**
JUMO House
Temple Bank, Riverway
Harlow, Essex, CM20 2DY, UK
Phone: +44 1279 63 55 33
Fax: +44 1279 62 50 29
Email: sales@jumo.co.uk
Internet: www.jumo.co.uk

**JUMO Process Control, Inc.**
6724 Joy Road
East Syracuse, NY 13057, USA
Phone: +1 315 437 5866
Fax: +1 315 437 5860
Email: info.us@jumo.net
Internet: www.jumousa.com



# Dimensions

Type 604514/2280-... with protection type IP40

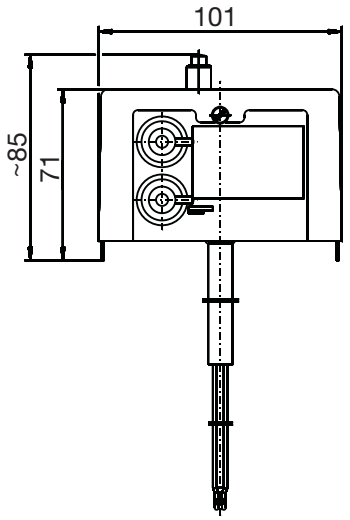


Design 1 with support tube, switching head is mounted with 2 screws through the case bottom section, extra code 711

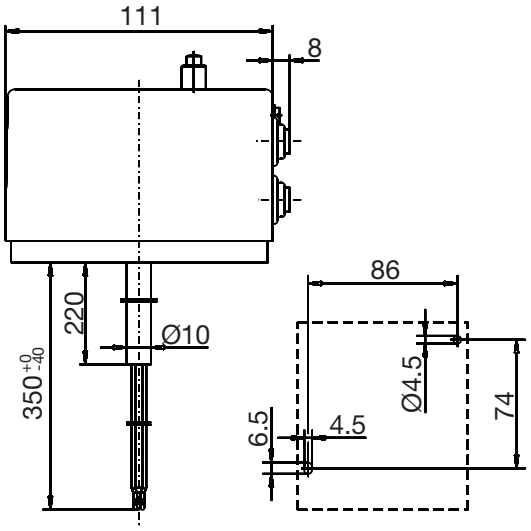


Drilling plan

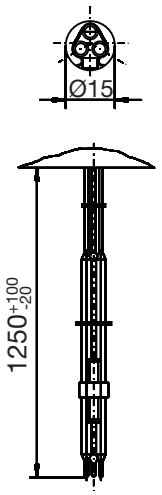


View 10

Design 2 without support tube, switching head is mounted with 2 screws through the case bottom section, extra code 711 with capillary, process connection 10

Typ 604514/2280-.../402 with protection type IP54 (extra code 402)

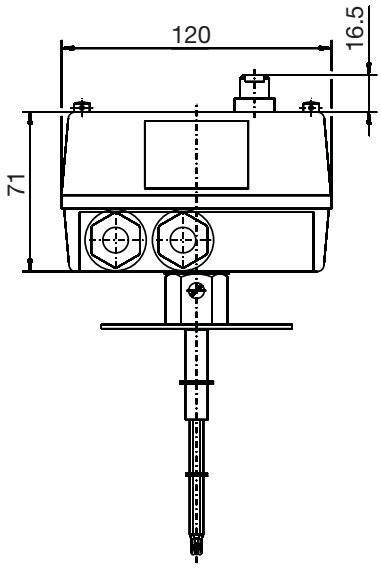


Design 1 with support tube, process connection 26, thermowell with flange, open

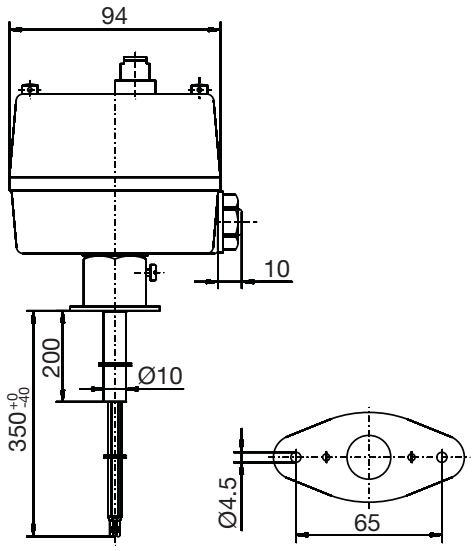


Drilling plan

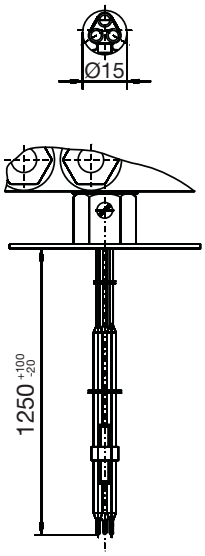


View 10

Design 2 without support tube, switching head is mounted by using a mounting flange made of CuZn, extra code 764 with capillary, process connection 10

**JUMO GmbH & Co. KG**
Delivery address: Mackenrodtstraße 14
36039 Fulda, Germany
Postal address: 36035 Fulda, Germany
Phone: +49 661 6003-0
Fax: +49 661 6003-607
Email: mail@jumo.net
Internet: www.jumo.net

**JUMO Instrument Co. Ltd.**
JUMO House
Temple Bank, Riverway
Harlow, Essex, CM20 2DY, UK
Phone: +44 1279 63 55 33
Fax: +44 1279 62 50 29
Email: sales@jumo.co.uk
Internet: www.jumo.co.uk

**JUMO Process Control, Inc.**
6724 Joy Road
East Syracuse, NY 13057, USA
Phone: +1 315 437 5866
Fax: +1 315 437 5860
Email: info.us@jumo.net
Internet: www.jumousa.com



# Connection diagram

The connection diagram in the data sheet provides information on product selection.

**For the electrical connection, only use the installation instructions or the operating manual.**

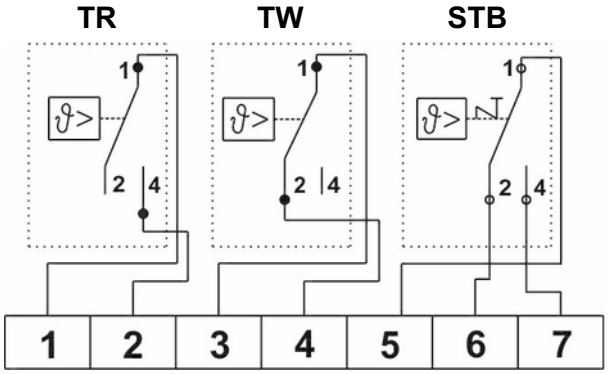


TR Ventilator
TW Burner
STB Burner

For versions without extra code 574, terminal 7 is not assigned.

**JUMO GmbH & Co. KG**
Delivery address: Mackenrodtstraße 14
36039 Fulda, Germany
Postal address: 36035 Fulda, Germany
Phone: +49 661 6003-0
Fax: +49 661 6003-607
Email: mail@jumo.net
Internet: www.jumo.net

**JUMO Instrument Co. Ltd.**
JUMO House
Temple Bank, Riverway
Harlow, Essex, CM20 2DY, UK
Phone: +44 1279 63 55 33
Fax: +44 1279 62 50 29
Email: sales@jumo.co.uk
Internet: www.jumo.co.uk

**JUMO Process Control, Inc.**
6724 Joy Road
East Syracuse, NY 13057, USA
Phone: +1 315 437 5866
Fax: +1 315 437 5860
Email: info.us@jumo.net
Internet: www.jumousa.com



# Order details

| | | |
|---|---|---|
| | **(1)** | **Basic type** |
| 604514 | | Hot air thermostat WTHc |
| | **(2)** | **Basic type extensions** |
| 2280 | | Temperature controller TR and temperature monitor TW with changeover contact, safety temperature limiter STB with N/C contact, and restart lock |
| | **(3)** | **Design** |
| 1 | | With support tube |
| 2 | | With capillary |
| | **(4)** | **Control range TR**[a] |
| 040 | | 20 to 80 °C |
| | **(5)** | **Control range TW**[a] |
| 070 | | 70 to 90 °C |
| | **(6)** | **Limit value STB**[a] |
| 10 | | 100 °C |
| | **(7)** | **Capillary length** |
| 0 | | Without capillary |
| 1250 | | 1,250 mm |
| | **(8)** | **Process connection** |
| 00 | | Without 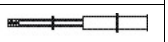 |
| 10 | | Plain cylindrical probe  |
| 26 | | Thermowell with flange, open 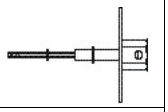 |
| | **(9)** | **Fitting length** |
| 000 | | With capillary |
| 350 | | 350 mm |
| | **(10)** | **Probe diameter** |
| 4 | | 4 mm |
| | **(11)** | **Extra codes** |
| 000 | | Without |
| 402 | | Protection type IP54 |
| 574 | | Microswitch with N/C contact, restart lock, and additional signal contacts |
| 711 | | Switching head is mounted by 2 screws through the case bottom section |
| 764 | | Mounting flange made of sheet steel |

[a] Other control ranges or limit ranges upon request.

| | (1) | | (2) | | (3) | | (4) | | (5) | | (6) | | (7) | | (8) | | (9) | | (10) | | (11) | |
|---|---|---|---|---|---|---|---|---|---|---|---|---|---|---|---|---|---|---|---|---|---|---|
| **Order code** | | / | | - | | - | | - | | - | | - | | - | | - | | / | | , ...[a] |
| Order example | 604514 | / | 2280 | - | 1 | - | 040 | - | 070 | - | 100 | - | 0 | - | 26 | - | 350 | - | 4 | / | 574 | |

[a] List extra codes in sequence, separated by commas.

# Stock versions

| Order code | Design | Capillary length | Fitting length | Part no. |
|---|---|---|---|---|
| 604514/2280-1-040-070-100-0-00-350-4/574, 711 | With support tube | - | 350 mm | 60002161 |
| 604514/2280-2-040-070-100-1250-10-000-4/574, 711 | With capillary | 1250 mm | With capillary | 60002162 |
| 604514/2280-1-040-070-100-0-26-350-4/574, 402 | With support tube | - | 350 mm | 60002658 |