Compensated High Current Choke, 3-phase and neutral line

new



See below:
Approvals and Compliances

Description
- Current compensated choke
- 3-phase and neutral line
- THT-terminals
- Flange for mounting onto printed circuit board

Unique Selling Proposition
- Compact size and light weight
- Open design for optimal cooling
- Nanocrystalline ring cores
- Customer specific pin outs available

Applications
- Frequency converter
- Charge stations
- UPS-systems

Weblinks
pdf data sheet, html datasheet, General Product Information, Distributor-Stock-Check, Detailed request for product, Landing Page

Technical Data

Rated voltage	500/760 VAC/VDC
Rated Current	10 - 40 A @ Ta 40 °C
Rated inductance	0.75 - 6.5 mH, Tol. -30% +50%
Power Operating Frequency	0 - 400 Hz
Terminal Type	THT
Weight	100 - 165 g
Material: Housing	UL 94V-0

Test Voltage	500 V: 2150 VDC, 2 sec, winding to winding
	760 V: 3300 VDC, 2 sec, winding to winding
Climatic Category	40/100/21 acc. to IEC 60068-1
Allowable Operation Temp.	-40 °C to 100 °C

Approvals and Compliances

Detailed information on product approvals, code requirements, usage instructions and detailed test conditions can be looked up in Details about Approvals

SCHURTER products are designed for use in industrial environments. They have approvals from independent testing bodies according to national and international standards. Products with specific characteristics and requirements such as required in the automotive sector according to IATF 16949, medical technology according to ISO 13485 or in the aerospace industry can be offered exclusively with customer-specific, individual agreements by SCHURTER.

Application standards

Application standards where the product can be used

Organization	Design	Standard	Description
IEC	Designed for applications acc.	IEC/UL 60950	IEC 60950-1 includes the basic requirements for the safety of information technology equipment.

Compliances

The product complies with following Guide Lines

Identification	Details	Initiator	Description
RoHS	RoHS	SCHURTER AG	Directive RoHS 2011/65/EU, Amendment (EU) 2015/836
	China RoHS	SCHURTER AG	The law SJ / T 11363-2006 (China RoHS) has been in force since 1 March 2007. It is similar to the EU directive RoHS.
REACH	REACH	SCHURTER AG	On 1 June 2007, Regulation (EC) No 1907/2006 on the Registration, Evaluation, Authorization and Restriction of Chemicals 1 (abbreviated as "REACH") entered into force.

Dimension [mm]

52-10

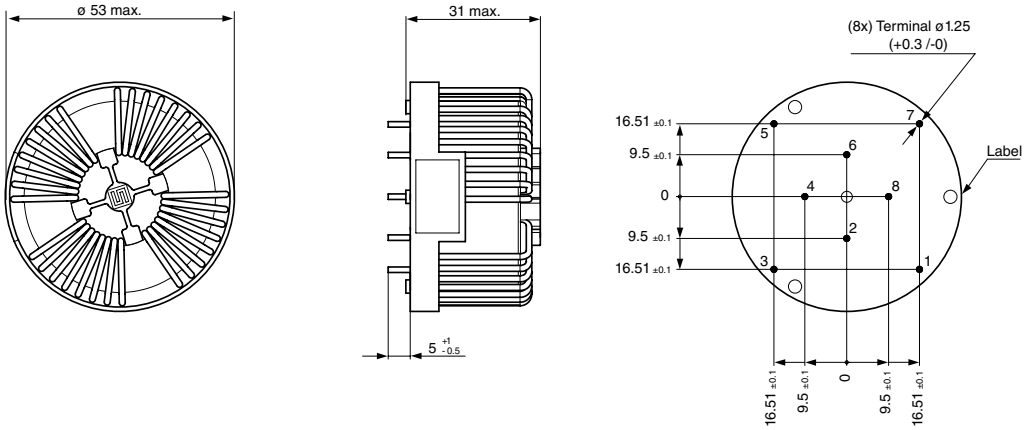

52-12

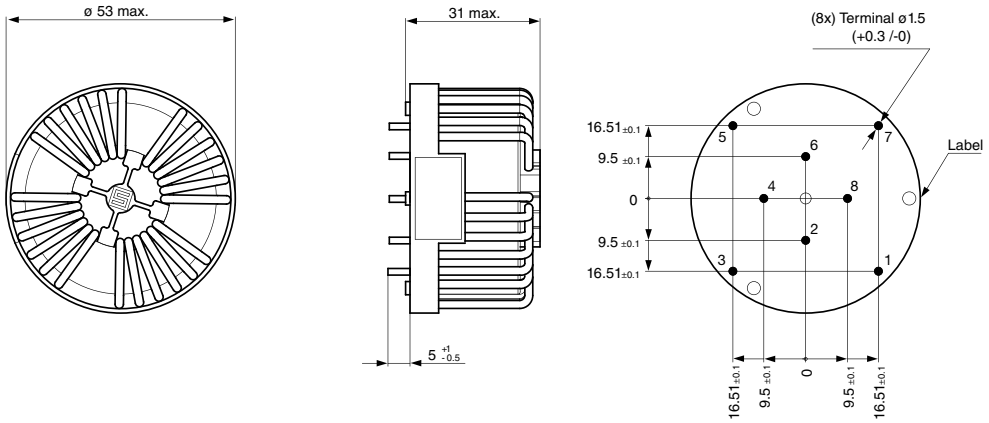

52-16

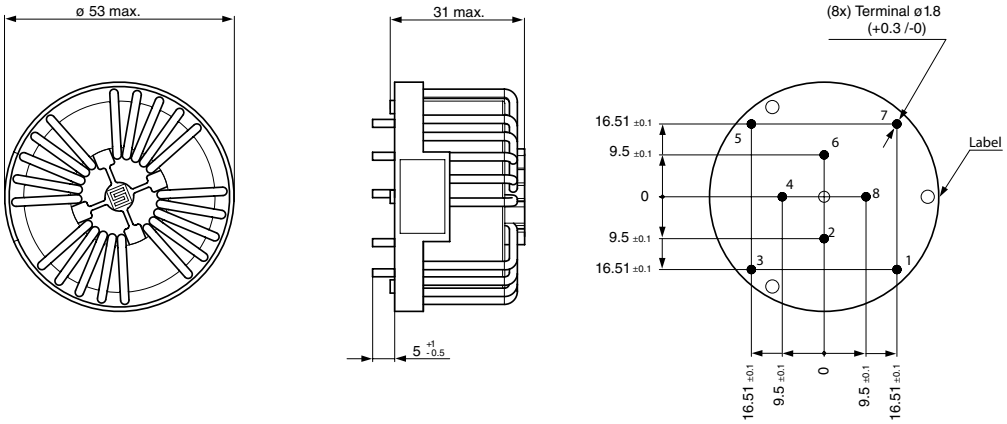

52-25

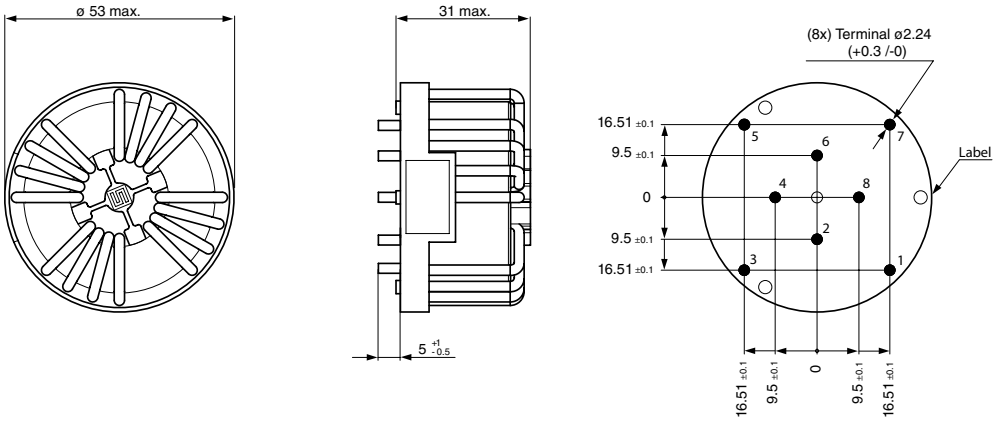

52-32

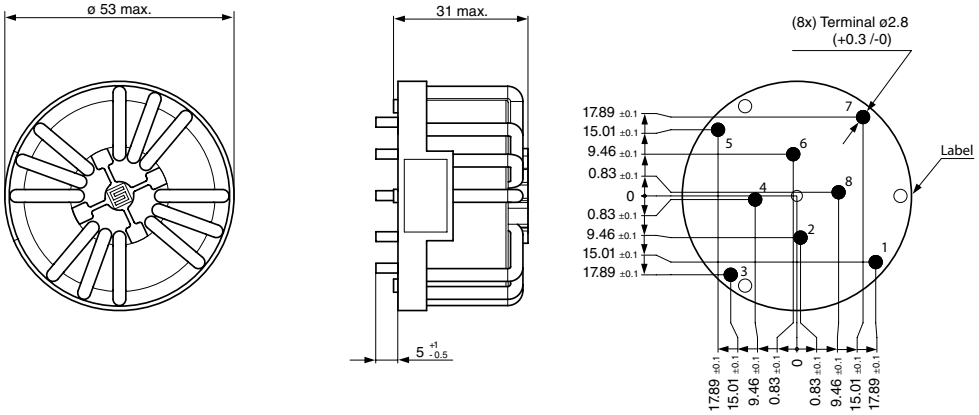

52-40

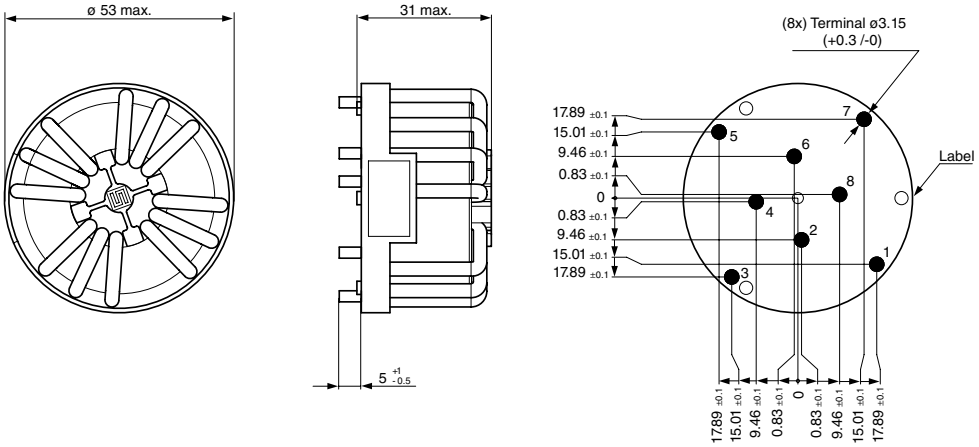

58-10

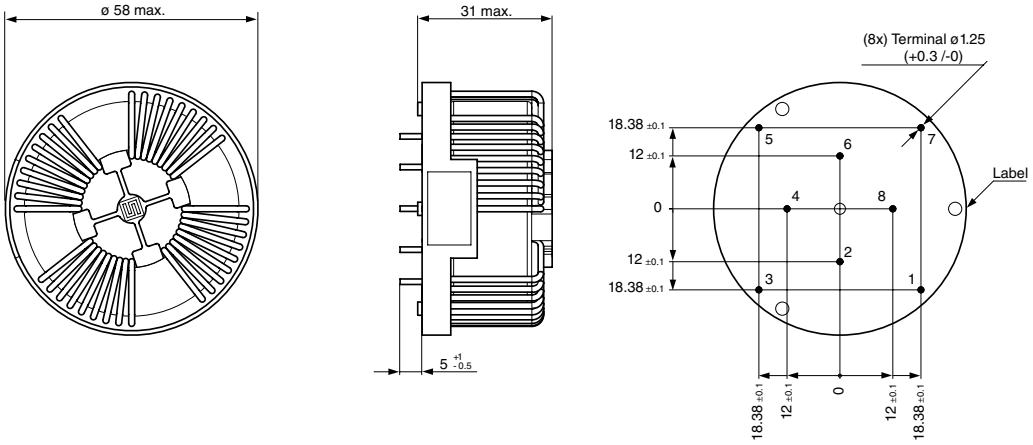

58-12

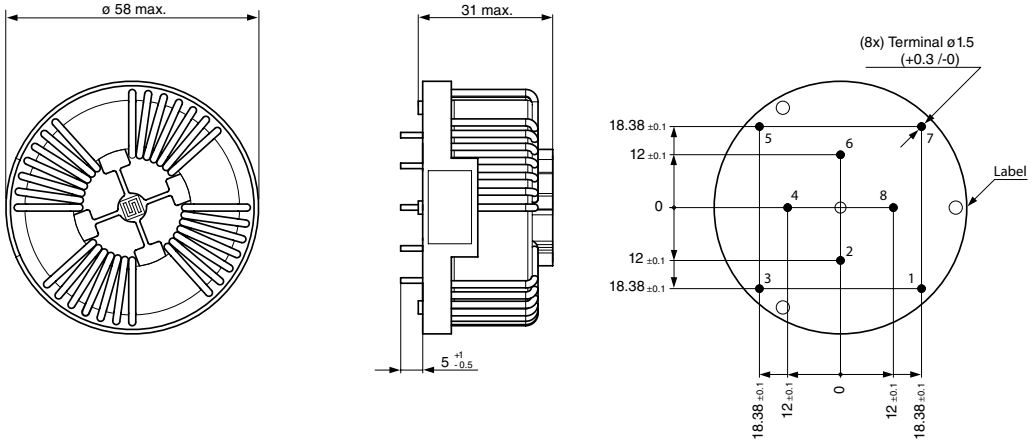

58-16

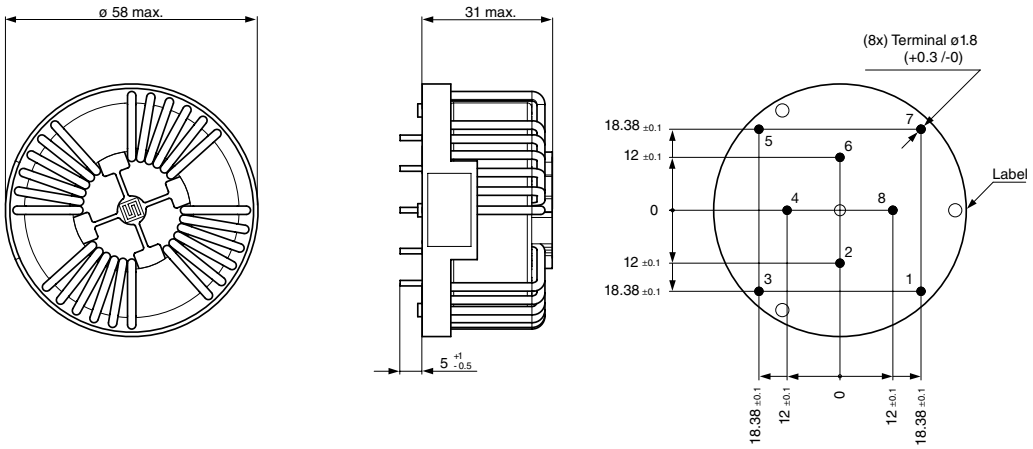

58-32

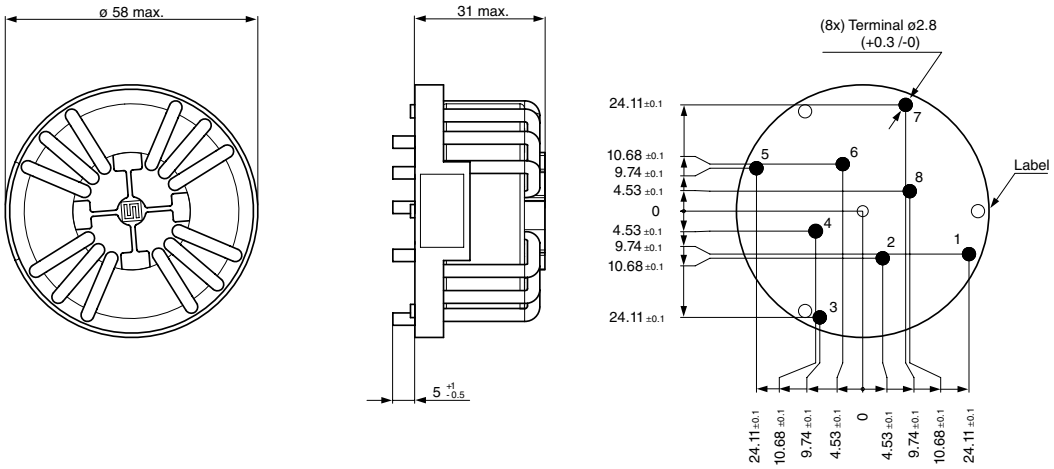

58-40

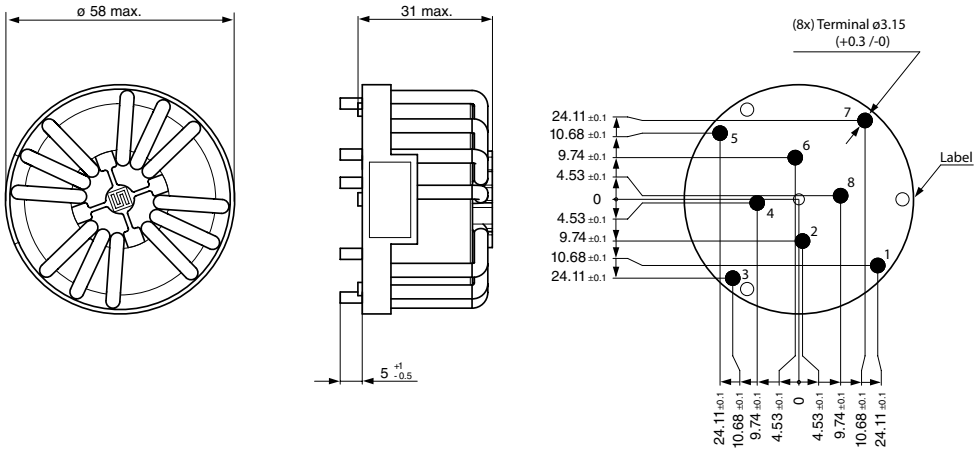

Diagrams

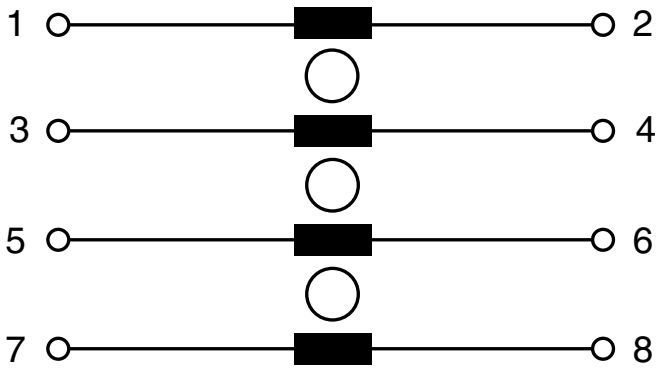

Impedance curves

DKIH-3452-xxxx-NK

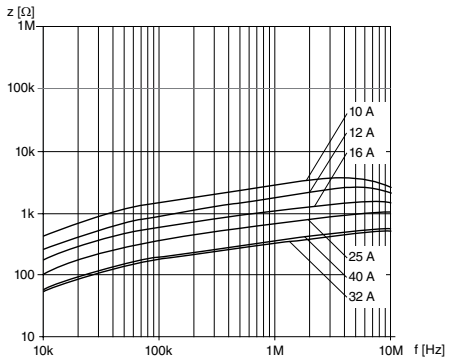

DKIH-3458-xxxx-NK

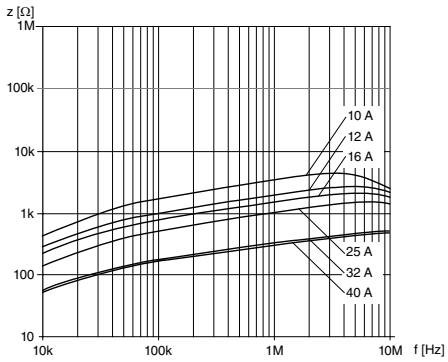

All Variants

I_n [A]	U_n [V]	L_n [mH]	R_{cu} [mΩ]	Tripped Power Dissipation [W]	f_{RES} [MHz]	Copper ø [mm]	Weight [g]	Housings	Packing unit [pcs.]	Order Number	
10	500	5.5	7	2.8	3.68	1.25	100 g	52-10	20	3-108-426	▮
12	500	3	3.7	2.13	5.06	1.5	105 g	52-12	20	3-108-427	▮
16	500	2.1	2.12	2.17	6.6	1.8	100 g	52-16	20	3-108-428	▮
25	500	1.35	1.12	2.8	9.56	2.24	110 g	52-25	20	3-108-430	▮
32	500	0.75	0.55	2.25	15.4	2.8	130 g	52-32	20	3-108-431	▮
40	500	0.75	0.44	2.82	13.4	3.15	140 g	52-40	20	3-108-432	▮
10	760	6.5	8	3.2	3.2	1.25	130 g	58-10	20	3-108-433	▮
12	760	4.0	4.33	2.49	4.8	1.5	130 g	58-12	20	3-108-434	▮
16	760	3.0	2.6	2.66	5.18	1.8	140 g	58-16	20	3-108-435	▮
25	760	2.0	1.4	3.5	6.6	2.24	150 g	58-25	20	3-108-437	▮
32	760	0.75	0.55	2.25	15.4	2.8	155 g	58-32	20	3-108-438	▮
40	760	0.75	0.44	2.82	15.4	3.15	165 g	58-40	20	3-108-439	▮

▮ Most Popular.

Availability for all products can be searched real-time:https://www.schurter.com/en/Stock-Check/Stock-Check-SCHURTER

30.05.2019

The specifications, descriptions and illustrations indicated in this document are based on current information. All content is subject to modifications and amendments. Information furnished is believed to be accurate and reliable. However, users should independently evaluate the suitability and test each product selected for their own applications.