RoHS ✔

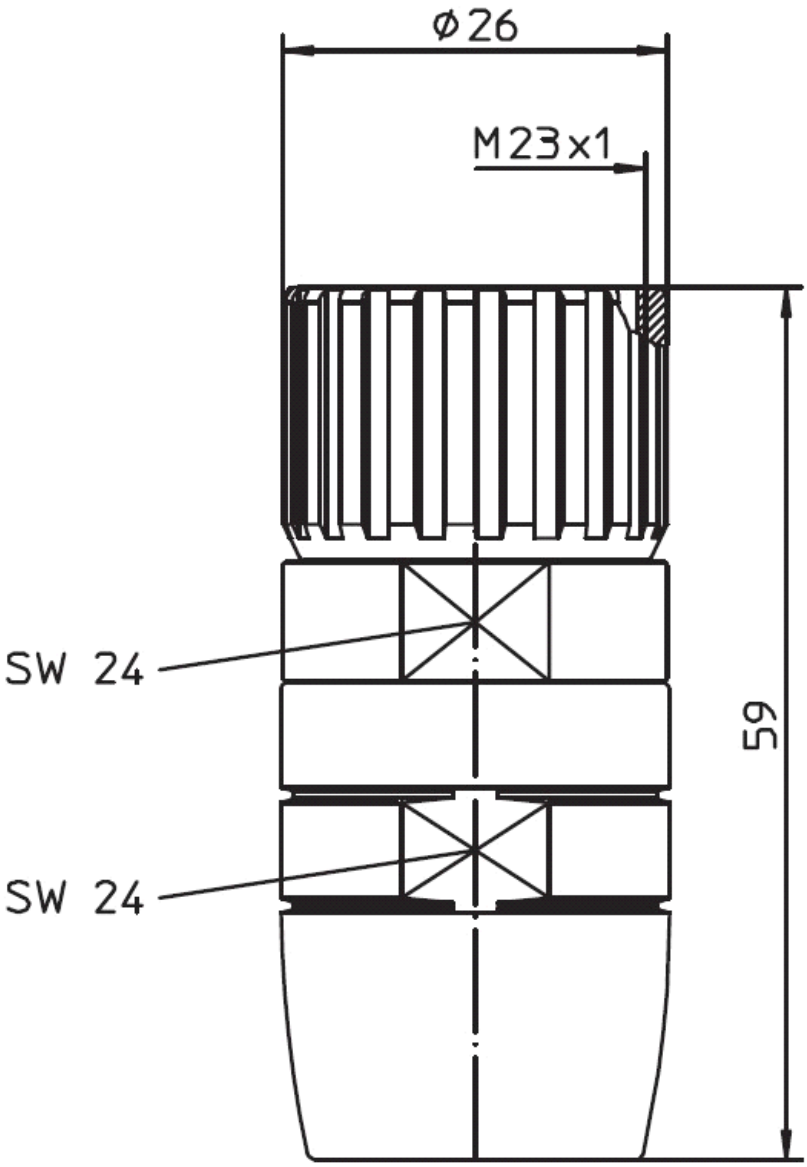

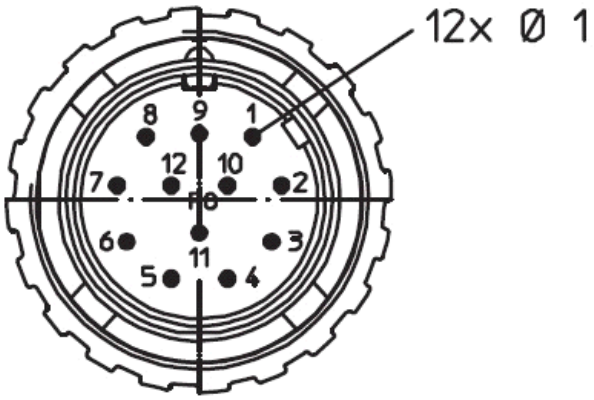

The information/details in this datasheet merely contain general descriptions or performance factors which, when applied in an actual situation, do not always correspond with the described form, and may be amended by way of the further development of products. The desired performance factors shall only be binding if these are expressly agreed on conclusion of the contract.

DIN ISO 5456-2

Product description

Description	M23 male connector with solder termination
Type	0976 PMC 201
Order No	7844
Type of contacts	male
Number of contacts	12
Conductor size	max. 0,75 mm²

Technical data

Rated voltage	50 V AC/ 60 V DC
Rated current *	8 A
Rated impulse voltage	0,8 kVeff./ 60s
Pollution degree	3 acc. to DIN EN 60664-1 (VDE 0110-1)
Suitable cables	max. Ø 14,5 mm
Type of connection	solder
Contact resistance	≤ 3 mOhm
Insulation resistance	> 10^12 Ohm

* Notice derating

Materials

Housing	CuZn , nickel-plated
Contact bearer	PBT
Contact	CuZn
Contact plating	Cu/Ni/Au
Knurled nut	CuZn, nickel-plated
Gasket(s)	FKM / NBR

Environmental conditions

Protection class (IEC 60529) *	IP67, mated
Temperature range (connector)	-40°C to +110°C, notice Derating

* only if mounted and locked in combination with Hirschmann / Lumberg connector.