BF3800D048

THREE-POLE CONTACTOR, IEC OPERATING CURRENT IE (AC3) = 38A, DC COIL, 48VDC



Product designation			Power contactor
Product type designation			BF38
Contact characteristics			
Number of poles		Nr.	3
Rated insulation voltage Ui IEC/EN		V	690
Rated impulse withstand voltage Uimp		kV	6
Operational frequency			
	min	Hz	25
	max	Hz	400
IEC Conventional free air thermal current Ith		A	56
Operational current Ie			
	AC-1 (≤40°C)	A	56
	AC-1 (≤40°C) with 16mm² wire and fork end lug	A	60
	AC-1 (≤55°C)	A	45
	AC-1 (≤55°C) with 16mm² wire and fork end lug	A	48
	AC-1 (≤70°C)	A	40
	AC-1 (≤70°C) with 16mm² wire and fork end lug	A	42
	AC-3 (≤440V ≤55°C)	A	38
	AC-4 (400V)	A	15.5
Rated operational power AC-3 (T≤55°C)			
	230V	kW	11
	400V	kW	18.5
	415V	kW	18.5
	440V	kW	18.5
	500V	kW	20
	690V	kW	22
Rated operational power AC-1 (T≤40°C)			
	230V	kW	21
	400V	kW	36
	500V	kW	45
	690V	kW	62
IEC max current Ie in DC1 with L/R ≤ 1ms with 1 poles in series			
	≤24V	A	35
	48V	A	30
	75V	A	23
	110V	A	8
	220V	A	–
IEC max current Ie in DC1 with L/R ≤ 1ms with 2 poles in series			
	≤24V	A	36
	48V	A	34
	75V	A	29
	110V	A	32
	220V	A	4
IEC max current Ie in DC1 with L/R ≤ 1ms with 3 poles in series			
	≤24V	A	36

The characteristics described in this document are subject to updates or modifications at any time. The descriptions, technical and functional information, illustrations and instructions in this brochure are purely illustrative, and are consequently not contractually binding

	48V	A	34
	75V	A	33
	110V	A	34
	220V	A	30
IEC max current Ie in DC1 with L/R ≤ 1ms with 4 poles in series			
	≤24V	A	36
	48V	A	34
	75V	A	33
	110V	A	34
	220V	A	38
IEC max current Ie in DC3-DC5 with L/R ≤ 15ms with 1 poles in series			
	≤24V	A	24
	48V	A	20
	75V	A	17
	110V	A	2,5
	220V	A	–
IEC max current Ie in DC3-DC5 with L/R ≤ 15ms with 2 poles in series			
	≤24V	A	28
	48V	A	25
	75V	A	22
	110V	A	18
	220V	A	3
IEC max current Ie in DC3-DC5 with L/R ≤ 15ms with 3 poles in series			
	≤24V	A	32
	48V	A	28
	75V	A	28
	110V	A	23
	220V	A	25
IEC max current Ie in DC3-DC5 with L/R ≤ 15ms with 4 poles in series			
	≤24V	A	32
	48V	A	28
	75V	A	28
	110V	A	23
	220V	A	15
Short-time allowable current for 10s (IEC/EN60947-1)		A	320
Protection fuse			
	gG (IEC)	A	63
	aM (IEC)	A	40
Making capacity (RMS value)		A	380
Breaking capacity at voltage			
	440V	A	304
	500V	A	240
	690V	A	192
Resistance per pole (average value)		mΩ	2
Power dissipation per pole (average value)			
	Ith	W	6
	AC3	W	2.9
Tightening torque for terminals			
	min	Nm	2.5
	max	Nm	3
	min	lbin	1.8
	max	lbin	2.2
Tightening torque for coil terminal			

The characteristics described in this document are subject to updates or modifications at any time. The descriptions, technical and functional information, illustrations and instructions in this brochure are purely illustrative, and are consequently not contractually binding

		min	Nm	0.8
		max	Nm	1
		min	Ibin	0.8
		max	Ibin	0.74
Max number of wires simultaneously connectable			Nr.	2
Conductor section				
	AWG/Kcmil			
		max		6
	Flexible w/o lug conductor section			
		min	mm²	2.5
		max	mm²	16
	Flexible c/w lug conductor section			
		min	mm²	1
		max	mm²	10
	Flexible with insulated spade lug conductor section			
		min	mm²	1
		max	mm²	10
Power terminal protection according to IEC/EN 60529				IP20 when properly wired
Mechanical features				
Operating position				
		normal		Vertical plan
		allowable		±30°
Fixing				Screw / DIN rail 35mm
Weight			g	560
Conductor section				
	AWG/kcmil conductor section			
		max		6
Operations				
Mechanical life			cycles	20000000
Electrical life			cycles	1400000
Safety related data				
Performance level B10d according to EN/ISO 13489-1				
		rated load	cycles	1400000
		mechanical load	cycles	20000000
Mirror contats according to IEC/EN 609474-4-1				yes
EMC compatibility				yes
DC coil operating				
DC rated control voltage			V	48
DC operating voltage				
	pick-up			
		min	%Us	70
		max	%Us	125
	drop-out			
		min	%Us	10
		max	%Us	40
Average coil consumption ≤20°C				
		in-rush	W	5.4
		holding	W	5.4
Max cycles frequency				
Mechanical operation			cycles/h	3600
Operating times				

The characteristics described in this document are subject to updates or modifications at any time. The descriptions, technical and functional information, illustrations and instructions in this brochure are purely illustrative, and are consequently not contractually binding

Average time for Us control					
	in AC				
		Closing NO			
			min	ms	8
			max	ms	24
		Opening NO			
			min	ms	5
			max	ms	15
		Closing NC			
			min	ms	9
			max	ms	20
		Opening NC			
			min	ms	9
			max	ms	17
	in DC				
		Closing NO			
			min	ms	54
			max	ms	66
		Opening NO			
			min	ms	14
			max	ms	17
UL technical data					
Full-load current (FLA) for three-phase AC motor					
			at 480V	A	40
			at 600V	A	32
Yielded mechanical performance					
	for single-phase AC motor				
			110/120V	HP	3
			230V	HP	7.5
	for three-phase AC motor				
			200/208V	HP	10
			220/230V	HP	15
			460/480V	HP	30
			575/600V	HP	30
General USE					
	Contactor				
			AC current	A	55
Short-circuit protection fuse, 600V					
	High fault				
			Short circuit current	kA	100
			Fuse rating	A	100
			Fuse class		J
	Standard fault				
			Short circuit current	kA	5
			Fuse rating	A	150
Ambient conditions					
Temperature					
	Operating temperature				
			min	°C	-50
			max	°C	70
	Storage temperature				
			min	°C	-60
			max	°C	80
Max altitude				m	3000

The characteristics described in this document are subject to updates or modifications at any time. The descriptions, technical and functional information, illustrations and instructions in this brochure are purely illustrative, and are consequently not contractually binding

Resistance & Protection

Pollution degree	3

Dimensions

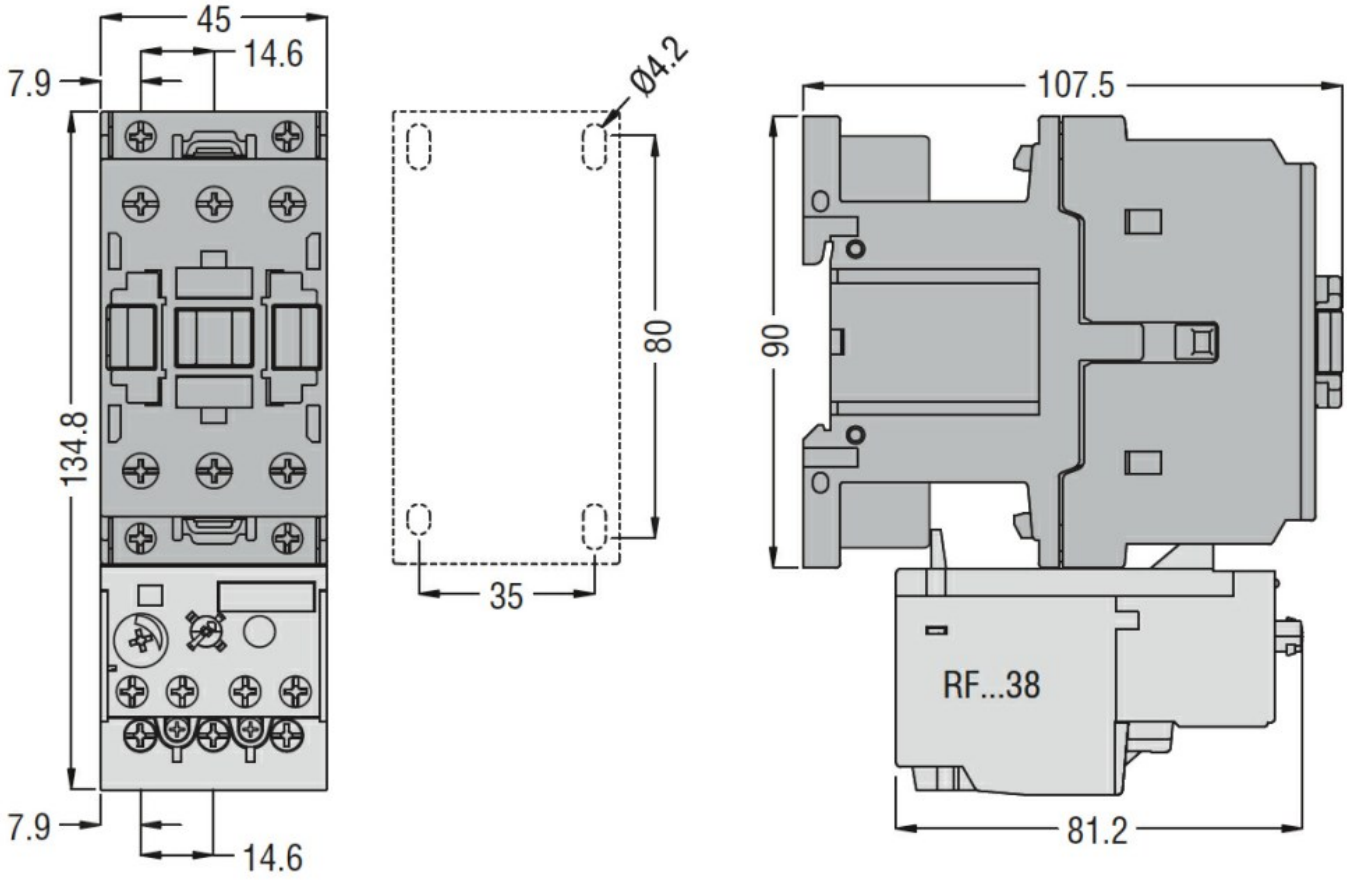

Wiring diagrams

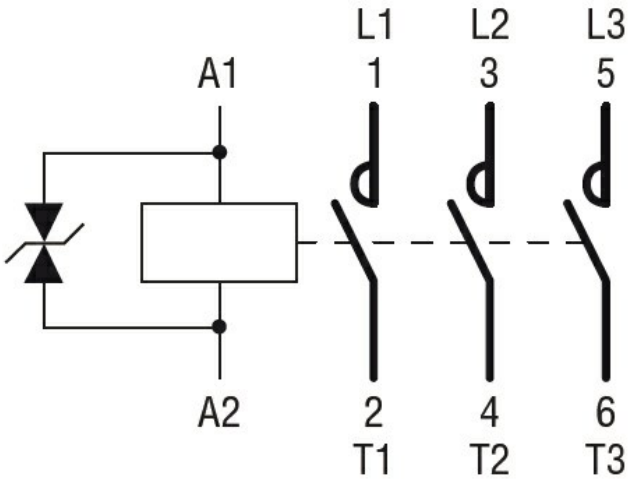

Certifications and compliance

Compliance

CSA C22.2 n° 60947-1
CSA C22.2 n° 60947-4-1
IEC/EN/BS 60947-1
IEC/EN/BS 60947-4-1
UL 60947-1

The characteristics described in this document are subject to updates or modifications at any time. The descriptions, technical and functional information, illustrations and instructions in this brochure are purely illustrative, and are consequently not contractually binding

	UL 60947-4-1
Certificates	
	CCC
	cULus
	EAC

ETIM classification

ETIM 8.0	EC000066 - Power contactor, AC switching

The characteristics described in this document are subject to updates or modifications at any time. The descriptions, technical and functional information, illustrations and instructions in this brochure are purely illustrative, and are consequently not contractually binding