3312 A

Popular item
SKF Explorer

Dimensions

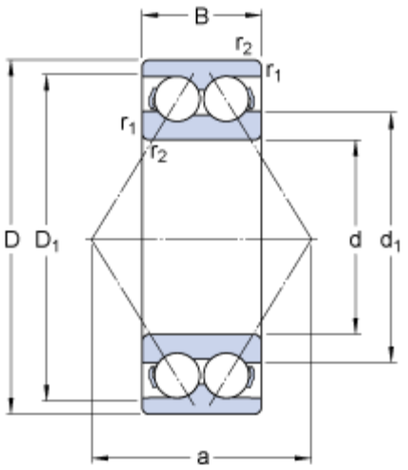

d		60	mm
D		130	mm
B		54	mm
d_1	≈	84.2	mm
D_1	≈	110	mm
$r_{1,2}$	min.	2.1	mm
a		78	mm

Abutment dimensions

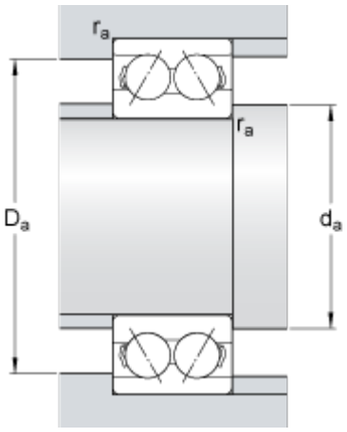

d_a	min.	72	mm
D_a	max.	118	mm
r_a	max.	2	mm

Calculation data

Basic dynamic load rating	C	127	kN
Basic static load rating	C_0	95	kN
Fatigue load limit	P_u	4.05	kN
Reference speed		5600	r/min
Limiting speed		5000	r/min
Calculation factor	k_r	0.07	
Calculation factor	e	0.8	
Calculation factor	X	0.63	
Calculation factor	Y_0	0.66	
Calculation factor	Y_1	0.78	
Calculation factor	Y_2	1.24	

Mass

Mass bearing	2.8	kg