E20722

Reflector for retro-reflective laser sensors

REFLECTOR LASER TS-48X48

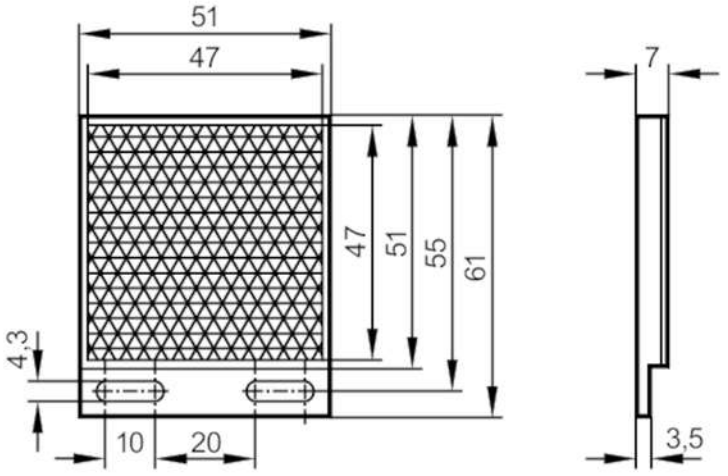

Application		
Design		rectangular, for retro-reflective laser sensors and glass and film detection
Operating conditions		
Ambient temperature	[°C]	-10...60
Mechanical data		
Weight	[g]	13.9
Dimensions	[mm]	61 x 51 x 7
Reflector surface	[mm]	47 x 47
Materials		plastics
Remarks		
Pack quantity		1 pcs.