BF95T4E110

FOUR-POLE CONTACTOR, IEC OPERATING CURRENT ITH (AC1) = 140A, AC/DC COIL, 110VAC/DC



Product designation			Power contactor
Product type designation			BF95
Contact characteristics			
Number of poles		Nr.	4
Rated insulation voltage Ui IEC/EN		V	1000
Rated impulse withstand voltage Uimp		kV	8
Operational frequency			
	min	Hz	25
	max	Hz	400
IEC Conventional free air thermal current Ith		A	140
Operational current Ie			
	AC-1 (≤40°C)	A	140
	AC-1 (≤55°C)	A	115
	AC-1 (≤70°C)	A	100
	AC-3 (≤440V ≤55°C)	A	95
	AC-4 (400V)	A	45
IEC max current Ie in DC1 with L/R ≤ 1ms with 1 poles in series			
	≤24V	A	140
	48V	A	140
	75V	A	100
	110V	A	10
	220V	A	–
IEC max current Ie in DC1 with L/R ≤ 1ms with 2 poles in series			
	≤24V	A	140
	48V	A	140
	75V	A	140
	110V	A	110
	220V	A	12
IEC max current Ie in DC1 with L/R ≤ 1ms with 3 poles in series			
	≤24V	A	140
	48V	A	140
	75V	A	155
	110V	A	120
	220V	A	125
IEC max current Ie in DC1 with L/R ≤ 1ms with 4 poles in series			
	≤24V	A	140
	48V	A	140
	75V	A	155
	110V	A	140
	220V	A	140
IEC max current Ie in DC3-DC5 with L/R ≤ 15ms with 1 poles in series			
	≤24V	A	140
	48V	A	44
	75V	A	36
	110V	A	6

The characteristics described in this document are subject to updates or modifications at any time. The descriptions, technical and functional information, illustrations and instructions in this brochure are purely illustrative, and are consequently not contractually binding

	220V	A	–
IEC max current Ie in DC3-DC5 with L/R ≤ 15ms with 2 poles in series			
	≤24V	A	140
	48V	A	63
	75V	A	60
	110V	A	55
	220V	A	7
IEC max current Ie in DC3-DC5 with L/R ≤ 15ms with 3 poles in series			
	≤24V	A	140
	48V	A	115
	75V	A	90
	110V	A	85
	220V	A	76
IEC max current Ie in DC3-DC5 with L/R ≤ 15ms with 4 poles in series			
	≤24V	A	140
	48V	A	110
	75V	A	110
	110V	A	105
	220V	A	95
Short-time allowable current for 10s (IEC/EN60947-1)		A	760
Protection fuse			
	gG (IEC)	A	160
	aM (IEC)	A	100
Making capacity (RMS value)		A	1200
Breaking capacity at voltage			
	440V	A	1100
	500V	A	775
	690V	A	745
Resistance per pole (average value)		mΩ	0.45
Power dissipation per pole (average value)			
	Ith	W	8.8
	AC3	W	4.1
Tightening torque for terminals			
	min	Nm	6
	max	Nm	7
	min	lbin	4.4
	max	lbin	5.2
Tightening torque for coil terminal			
	min	Nm	0.8
	max	Nm	1
	min	lbin	0.59
	max	lbin	0.74
Conductor section			
AWG/Kcmil			
	max		2/0
Flexible w/o lug conductor section			
	min	mm²	1.5
	max	mm²	70
Flexible c/w lug conductor section			
	min	mm²	1.5
	max	mm²	70
Power terminal protection according to IEC/EN 60529			IP20 front

Mechanical features

The characteristics described in this document are subject to updates or modifications at any time. The descriptions, technical and functional information, illustrations and instructions in this brochure are purely illustrative, and are consequently not contractually binding

Operating position			
	normal		Vertical plan
	allowable		±30°
Fixing			Screw / DIN rail 35mm
Weight		g	2460
Conductor section			
AWG/kcmil conductor section			
	max		2/0
Auxiliary contact characteristics			
Thermal current Ith		A	140
Operations			
Mechanical life		cycles	15000000
Electrical life		cycles	1400000
AC coil operating			
Rated AC voltage at 50/60Hz, 60Hz			
	min	V	60
	max	V	110
Rated AC voltage at 50/60Hz		V	110
AC operating voltage			
of 50/60Hz coil powered at 50Hz			
pick-up			
	min	%Us	80 Us min
	max	%Us	110 Us max
drop-out			
	max	%Us	≤70 Us min
of 50/60Hz coil powered at 60Hz			
pick-up			
	min	%Us	80 Us min
	max	%Us	110 Us max
drop-out			
	max	%Us	≤70 Us min
AC average coil consumption at 20°C			
of 50/60Hz coil powered at 50Hz			
	in-rush	VA	70…175
	holding	VA	1.7…3.5
of 50/60Hz coil powered at 60Hz			
	in-rush	VA	70…175
	holding	VA	1.7…3.5
of 60Hz coil powered at 60Hz			
	in-rush	VA	70…175
	holding	VA	1.7…3.5
Dissipation at holding ≤20°C 50Hz		W	1.3…1,5
DC coil operating			
DC rated control voltage			
	min	V	60
	max	V	110
DC rated control voltage		V	110
DC operating voltage			
pick-up			
	min	%Us	80 Us min
	max	%Us	110 Us max
drop-out			

The characteristics described in this document are subject to updates or modifications at any time. The descriptions, technical and functional information, illustrations and instructions in this brochure are purely illustrative, and are consequently not contractually binding

				max	%Us	≤70 Us min
Average coil consumption ≤20°C						
				in-rush	W	70…80
				holding	W	1.3…1.5
Max cycles frequency						
Mechanical operation					cycles/h	1500
Operating times						
Average time for Us control						
	in AC					
		Closing NO				
				min	ms	45
				max	ms	90
		Opening NO				
				min	ms	24
				max	ms	60
	in DC					
		Closing NO				
				min	ms	45
				max	ms	85
		Opening NO				
				min	ms	24
				max	ms	60
UL technical data						
General USE						
	Contactor					
				AC current	A	150
Short-circuit protection fuse, 600V						
	High fault					
				Short circuit current	kA	100
				Fuse rating	A	200
				Fuse class		J
	Standard fault					
				Short circuit current	kA	10
				Fuse rating	A	250
				Fuse class		RK5
Ambient conditions						
Temperature						
	Operating temperature					
				min	°C	-50
				max	°C	70
	Storage temperature					
				min	°C	-60
				max	°C	+80
Max altitude					m	3000
Dimensions						

The characteristics described in this document are subject to updates or modifications at any time. The descriptions, technical and functional information, illustrations and instructions in this brochure are purely illustrative, and are consequently not contractually binding

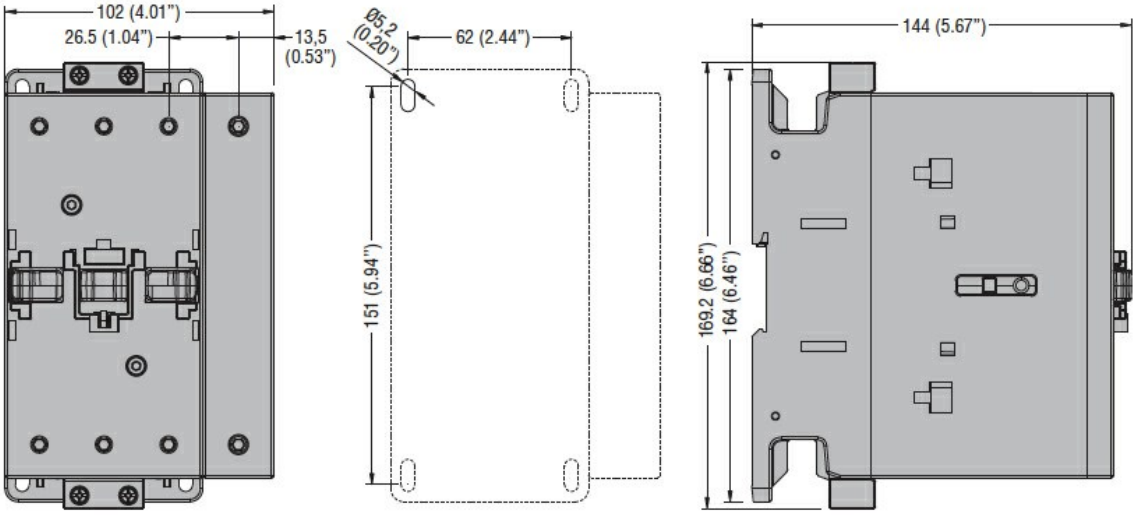

Wiring diagrams

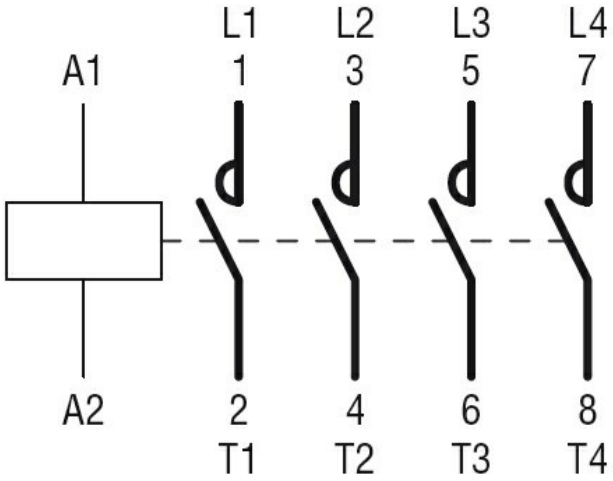

Certifications and compliance

Compliance

CSA C22.2 n° 60947-1
CSA C22.2 n° 60947-4-1
IEC/EN/BS 60947-1
IEC/EN/BS 60947-4-1
UL 60947-1
UL 60947-4-1

Certificates

CCC
cULus
EAC

ETIM classification

ETIM 8.0	EC000066 - Power contactor, AC switching

The characteristics described in this document are subject to updates or modifications at any time. The descriptions, technical and functional information, illustrations and instructions in this brochure are purely illustrative, and are consequently not contractually binding