herga

low pressure switches product 6731

Table A - Electrical Ratings and Switch Approvals

		1				2				3	
Pressure switches		6731-10				6731-06				6731-03	
Average Life Expectancy	Mechanical	$1{\cdot}0 \times 10^6$				2×10^6				2×10^6	
	Electrical	200K @ 10A 10K @ 21A				200K @ 6A 50K @ 10A				200K @ 1A	
		Max. Electrical Load				Max. Electrical Load				Max. Electrical Load	
		Res.	Ind.	(Pf 0.75)	Motor	Res.	Ind.	(Pf 0.75)	Motor	Res.	Ind.
	125V	21A	15A		1HP	10A	10A		0.5HP	3A	1A
AC	250V	21A	15A		2HP	10A	10A		0.5HP	3A	1A
DC	6V	21A	21A			10A	10A			3A	1A
	12V	15A	15A			5A	3A			3A	1A
	24V	8A	7A			5A	3A			1A	0.5A
	60V	1A	0.5A			1A	0.5A			1A	0.5A
	110V	0.5A	0.2A			0.5A	0.2A			0.5A	0.2A
	220V	0.25A	0.1A			0.25A	0.1A			0.25A	0.1A
Approvals Available		V.D.E. U.L. B.E.A.B. Approved to BS 3955 part III		C.E.E. C.S.A.		V.D.E. U.L. B.E.A.B. Approved to BS 3955 Part III		C.E.E. C.S.A.		V.D.E. U.L.	C.E.E. C.S.A.

Notes:-
1. Dry Switching
If switching low power circuits, low current (4 to 100 milliamperes) and low voltage (below 30V), consult Herga for special switches

NB
Herga do not accept liability for any pressure operated device used outside the pressure range specified by the company.

For quantity orders, special options are available.

- UL listed versions available.
- Double pole switching all ranges except -03.
- Switches set to specific operating pressure, rising or falling.
- Diaphragms in silicon rubber, nitrile, EPDM.
- Switches with wide or close differentials.
- Springs in stainless steel.
- Non standard pressure tube connections.

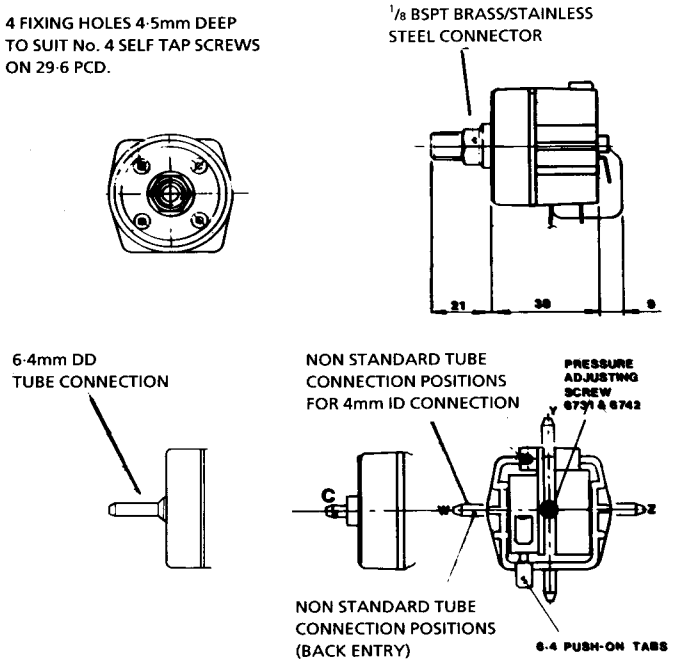

Table B - Suitability for use with different operating media

Pressure/Vacuum Medium	6731
Acetone	S
Ammonia (Liquid)	S
Amyl Alcohol to 20°C	S
Automotive Brake Fluid	S
Beer	S
Butane	R
Carbon Dioxide - Dry	R
Citric Acid	R
Copper Sulphate (Sol.)	S
Compressed Air	R
Cutting Oil	R
Diesel Oil	R
Detergent Solution	R
Fuel Oil	R
Glycol	R
Hydraulic Oil	R
Hydrogen	R
Lubricating Oil	R
Milk	S
Mineral Oil	R
Natural Gas	R
Oxygen to 70°C	R
Petrol	R
Plating Solution (Chrome)	S
Salt Water	S
Sewage	R
Turpentine	R
Vinegar	S
Water	R

R - Recommended S - Suitable with Modification

As a consequence of our policy of continual product improvement, we reserve the right to change without notice any detail in this publication. Please see our Conditions of Sale.

herga

low pressure switches
product 6731

Model 6731

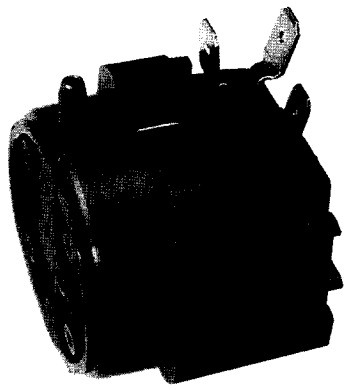

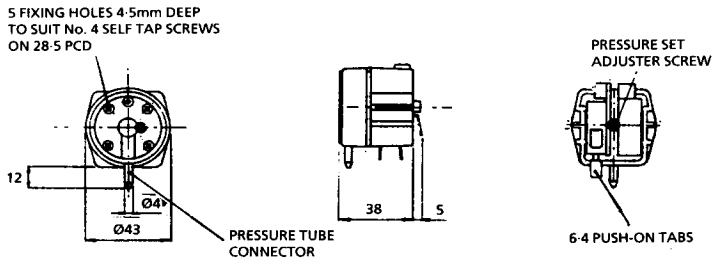

Model No.	Pressure Range - on increasing pressure		Differential (fixed)
	inches water	mm water	
6731-03	1.5 - 7	40 - 180	see Chart 1
6731-06	5 - 25	127 - 635	see Chart 1
6731-10	20 - 55	510 - 1400	see Chart 1

Chart 1

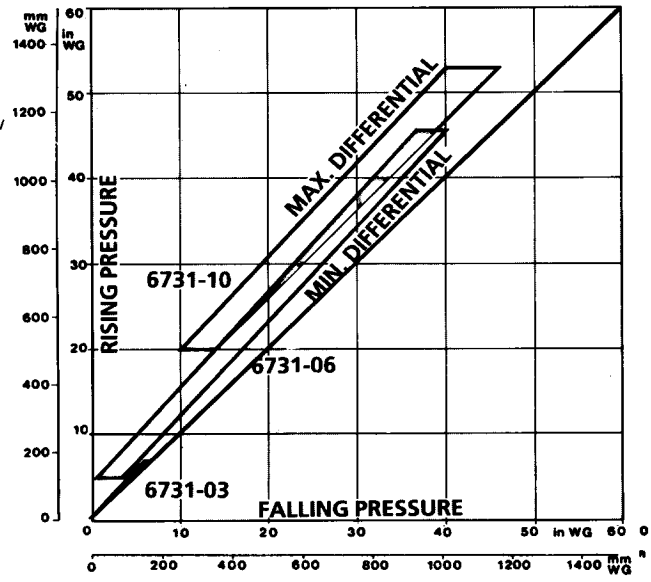

Model No.	**6731-03**	**6731-06**	**6731-10**
Electrical Data Switch	Single Pole Double Throw	Single Pole Double Throw	Single Pole Double Throw
Contact Rating	3(1)A 250v A.C.	10(3)A 250v A.C.	21(8)A 250v A.C.
Full data	Table A column 3	Table A column 2	Table A column 1
Pressure Connection	Side entry spout 4mm (·15") OD	Side entry spout 4mm (·15") OD	Side entry spout 4mm (·15") OD
Setting Accuracy*	±10%	±10%	±10%
Withstand Pressure	25 psi	25 psi	25 psi
Operating Media	Table B	Table B	Table B
Body Material	Nylon 12	Nylon 12	Nylon 12
Diaphragm	Neoprene	Neoprene	Neoprene
Spring	Spring Steel	Spring Steel	Spring Steel
Weight	50 gm	50 gm	50 gm

*When set by Herga