Surge-Trap® STMT23 Series

Surge Protection for Power Lines

SURGE PROTECTIVE DEVICE

LOW VOLTAGE SPD FOR AC/DC VOLTAGE CONTROL AND POWER APPLICATIONS



Mersen's Surge Trap STMT Series features low voltage surge protective devices suitable for both AC and DC voltage applications. With a slim design, these DIN-rail mount SPDs are ideal for limited space applications. The STMT23 Series is suitable for operating voltages from 12 to 230 VAC and 24-365 VDC, with optional dry contact feature for remote monitoring.

Technical Data Overview	
Surge Current Rating (I_{max})	6kA – 20kA
Nominal Discharge Current Rating (I_n)	3-10kA
Surge Capacity (I_{max})	6-20kA
Nominal Power Frequency	50-60 Hz
Mounting	35mm DIN-Rail
Wire Gauge Range	1,5 … 6 mm^2
Torque	6.2 lbs-in (0,7 Nm)
Backup Fuse	IEC: 63A gG / UL: 30A CC (ATMR30)
Body Material and Format	PC+GF; V-0 - Slim Monobloc – 2 Poles
Degree of Protection	IP 20 (finger-safe)
Flammability	UL94 V-0
Operating Temperature	– 40°F (40°C) to + 176°F (80°C)
Visual Status Indicator	LED Green = Functional / Red = Replace
Remote Status Indicator	Form C Dry Contacts

FEATURES/BENEFITS

- Suitable for corresponding DC voltage applications.
- DIN-rail mountable, space saving "Slim Monobloc" format
- Visual (LED) end of life indicator
- Optional remote status indicator
- 2-year warranty

APPLICATIONS

- Industrial Control Panels
- Power Supplies protection
- Communication Systems
- Telecom & IT & Data Centers
- LED outdoor lighting
- Water treatment

APPROVALS/STANDARDS

- IEC/EN 61643-11 - Type 2+3
- RoHS Compliant

** Agency information not applicable to DC ratings*

© 2024 Mersen. All rights reserved. Mersen reserves the right to change, update, or correct, without notice, any information contained in this datasheet.

Catalog Number	Reference Number	Nominal Voltage	Maximum Continuous Operating Voltage (MCOV)	I_{max} (8/20)	I_n (8/20)	Voltage Protection Level	U_p at I_n	Remote Monitoring?
83230500	STMT23-6K20V-SP-S	12 V	20 VAC 25 VDC	6 kA	3 kA	≤ 0.22 kV (L1-L2) ≤ 0.67 kV (L1/L2-PE)	≤ 0.22 kV (L1-L2) ≤ 0.70 kV (L1/L2-PE)	No
83230501	STMT23-6K20V-SP-SM	12 V	20 VAC 25 VDC	6 kA	3 kA	≤ 0.22 kV (L1-L2) ≤ 0.67 kV (L1/L2-PE)	≤ 0.22 kV (L1-L2) ≤ 0.70 kV (L1/L2-PE)	Yes
83230504	STMT23-6K30V-SP-S	24 V	30 VAC 36 VDC	6 kA	3 kA	≤ 0.26 kV (L1-L2) ≤ 0.78 kV (L1/L2-PE)	≤ 0.22 kV (L1-L2) ≤ 0.70 kV (L1/L2-PE)	No
83230505	STMT23-6K30V-SP-SM	24 V	30 VAC 36 VDC	6 kA	3 kA	≤ 0.26 kV (L1-L2) ≤ 0.78 kV (L1/L2-PE)	≤ 0.22 kV (L1-L2) ≤ 0.70 kV (L1/L2-PE)	Yes
83230506	STMT23-6K60V-SP-S	48 V	60 VAC 77 VDC	6 kA	3 kA	≤ 0.48 kV (L1-L2) ≤ 0.93 kV (L1/L2-PE)	≤ 0.33 kV (L1-L2) ≤ 0.70 kV (L1/L2-PE)	No
83230507	STMT23-6K60V-SP-SM	48 V	60 VAC 77 VDC	6 kA	3 kA	≤ 0.48 kV (L1-L2) ≤ 0.93 kV (L1/L2-PE)	≤ 0.33 kV (L1-L2) ≤ 0.70 kV (L1/L2-PE)	Yes
83230508	STMT23-6K75V-SP-S	60 V	75 VAC 100 VDC	6 kA	3 kA	≤ 0.48 kV (L1-L2) ≤ 0.93 kV (L1/L2-PE)	≤ 0.50 kV (L1-L2) ≤ 0.90 kV (L1/L2-PE)	No
83230509	STMT23-6K75V-SP-SM	60 V	75 VAC 100 VDC	6 kA	3 kA	≤ 0.48 kV (L1-L2) ≤ 0.93 kV (L1/L2-PE)	≤ 0.50 kV (L1-L2) ≤ 0.90 kV (L1/L2-PE)	Yes
83230502	STMT23-6K150V-SP-S	120 V	150 VAC 200 VDC	6 kA	3 kA	≤ 0.61 kV (L1-L2) ≤ 1.03 kV (L1/L2-PE)	≤ 0.70 kV (L1-L2) ≤ 0.90 kV (L1/L2-PE)	No
83230503	STMT23-6K150V-SP-SM	120 V	150 VAC 200 VDC	6 kA	3 kA	≤ 0.61 kV (L1-L2) ≤ 1.03 kV (L1/L2-PE)	≤ 0.70 kV (L1-L2) ≤ 0.90 kV (L1/L2-PE)	Yes
83230510	STMT23-20K275V-SP-S	240 V	275 VAC 365 VDC	20 kA	10 kA	≤ 0.96 kV (L1-L2) ≤ 1.04 kV (L1/L2-PE)	≤ 1.40 kV (L1-L2) ≤ 1.40 kV (L1/L2-PE)	No
83230511	STMT23-20K275V-SP-SM	240 V	275 VAC 365 VDC	20 kA	10 kA	≤ 0.96 kV (L1-L2) ≤ 1.04 kV (L1/L2-PE)	≤ 1.40 kV (L1-L2) ≤ 1.40 kV (L1/L2-PE)	Yes

DIMENSIONS

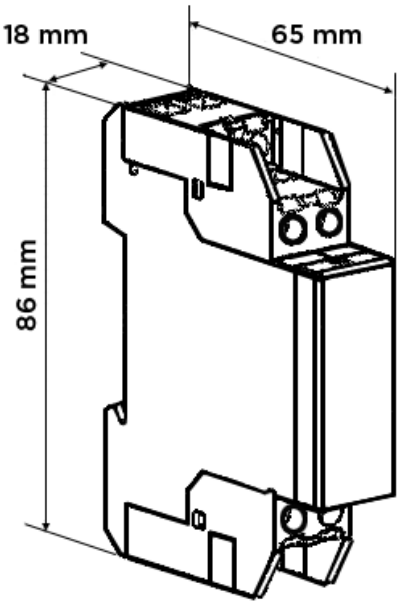

ELECTRICAL DIAGRAM

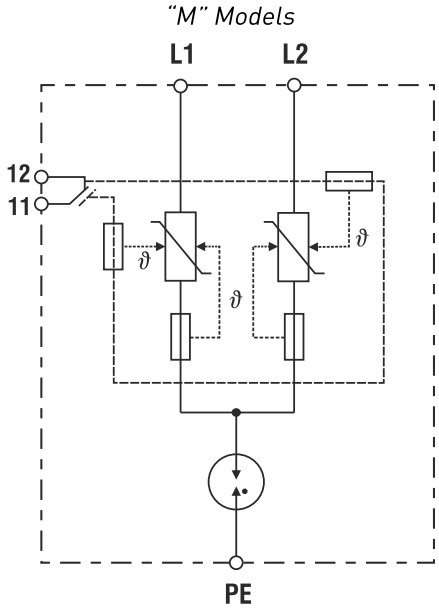

© 2024 Mersen. All rights reserved. Mersen reserves the right to change, update, or correct, without notice, any information contained in this datasheet.