Powering Business Worldwide

Instruction Leaflet
Montageanweisung
Notice d'installation
Instrucciones de montaje
Istruzioni per il montaggio
安装说明
Инструкция по монтажу
منشـــور التعليمـــات

06/21 IL03801009Z

T5B..., T5...

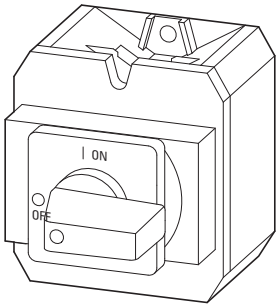

T5(B)…/E

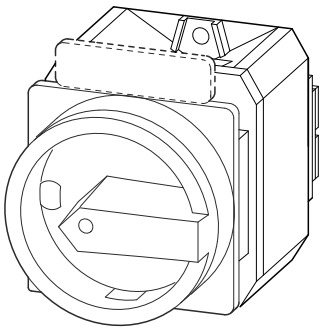

T5(B)…/EA/SVB

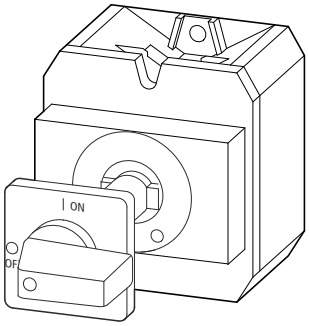

T5(B)…/Z

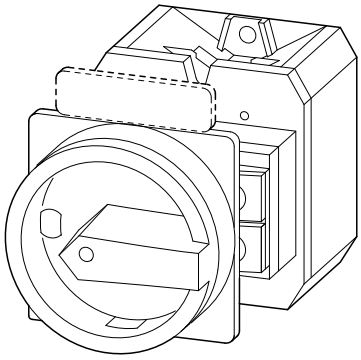

T5(B)…/V/SVB

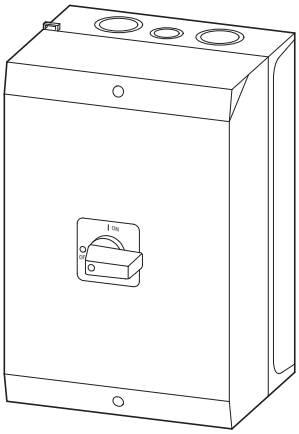

T5B…/I4

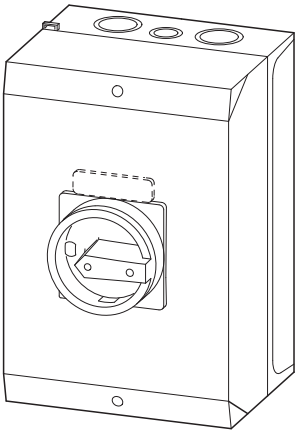

T5B…/I4/SVB

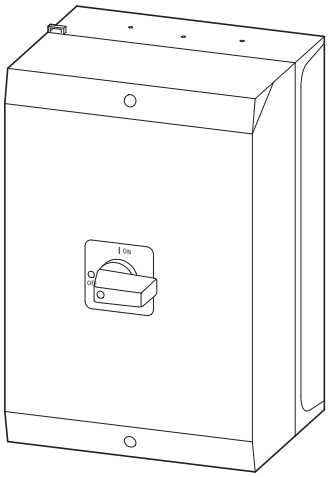

T5…/I5

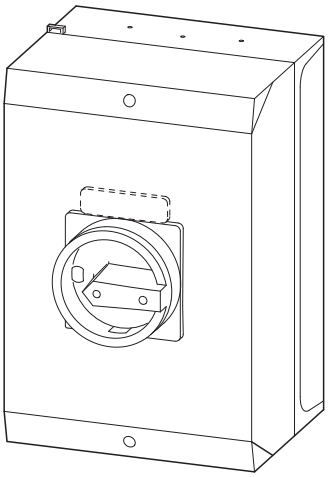

T5…/I5/SVB

(en) Electric current! Danger to life!
Only skilled or instructed persons may carry out the following operations.

(de) Lebensgefahr durch elektrischen Strom!
Nur Elektrofachkräfte und elektrotechnisch unterwiesene Personen dürfen die im Folgenden beschriebenen Arbeiten ausführen.

(fr) Tension électrique dangereuse !
Seules les personnes qualifiées et averties doivent exécuter les travaux ci-après.

(es) ¡Corriente eléctrica! ¡Peligro de muerte!
El trabajo a continuación descrito debe ser realizado por personas cualificadas y advertidas.

(it) Tensione elettrica: Pericolo di morte!
Solo persone abilitate e qualificate possono eseguire le operazioni di seguito riportate.

(zh) 触电危险！
只允许专业人员和受过专业训练的人员进行下列工作。

(ru) Электрический ток! Опасно для жизни!
Только специалисты или проинструктированные лица могут выполнять следующие операции.

(ar) تحـذير ! تيـار كهربـائي ! خطـر مـوت !
لا تتـــم اعمـــال الصـــيانة و التركيـــب الا مـــن قبـــل العـــاملين المـــدربين !

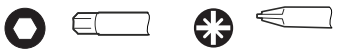

a	a
T5B	**13 mm** (0.51")
T5	**13 mm** (0.51")
UV-P3	**15 mm** (0.59")
K-CI-K4	**15 mm** (0.59")
K-CI-K5	**16 mm** (0.63")

T5B..., T5...		tightening torque
	1 x 1.5 - 25 mm^2 2 x 1.5 - 10 mm^2	**4 Nm** (35.5 lb-in)
	1 x 2.5 - 35 mm^2 2 x 2.5 - 16 mm^2	
UL-File: E36 332		
UL	AWG 12/4	

UL/CSA:

Suitable For Use As Motor Branch Circuit Disconnecting Means With Suffix SVB.
Break All Lines.

Short Circuit Withstand
10 kA RMS SYM 600 V AC
Max Fuse T5B… – 100 Class J
T5… – 100 Class J

Standard Short Circuit
5 kA RMS SYM 600 V AC
Max Fuse T5B… – 100 A
T5… – 100 A

Switch or enclosure must be padlockable if used as a Motor Branch Circuit Disconnector means.

T5(B)…/E
T5(B)…/EA/SVB(-SW)
T5(B)…/E+SVB(-SW)-P3
H1-T5

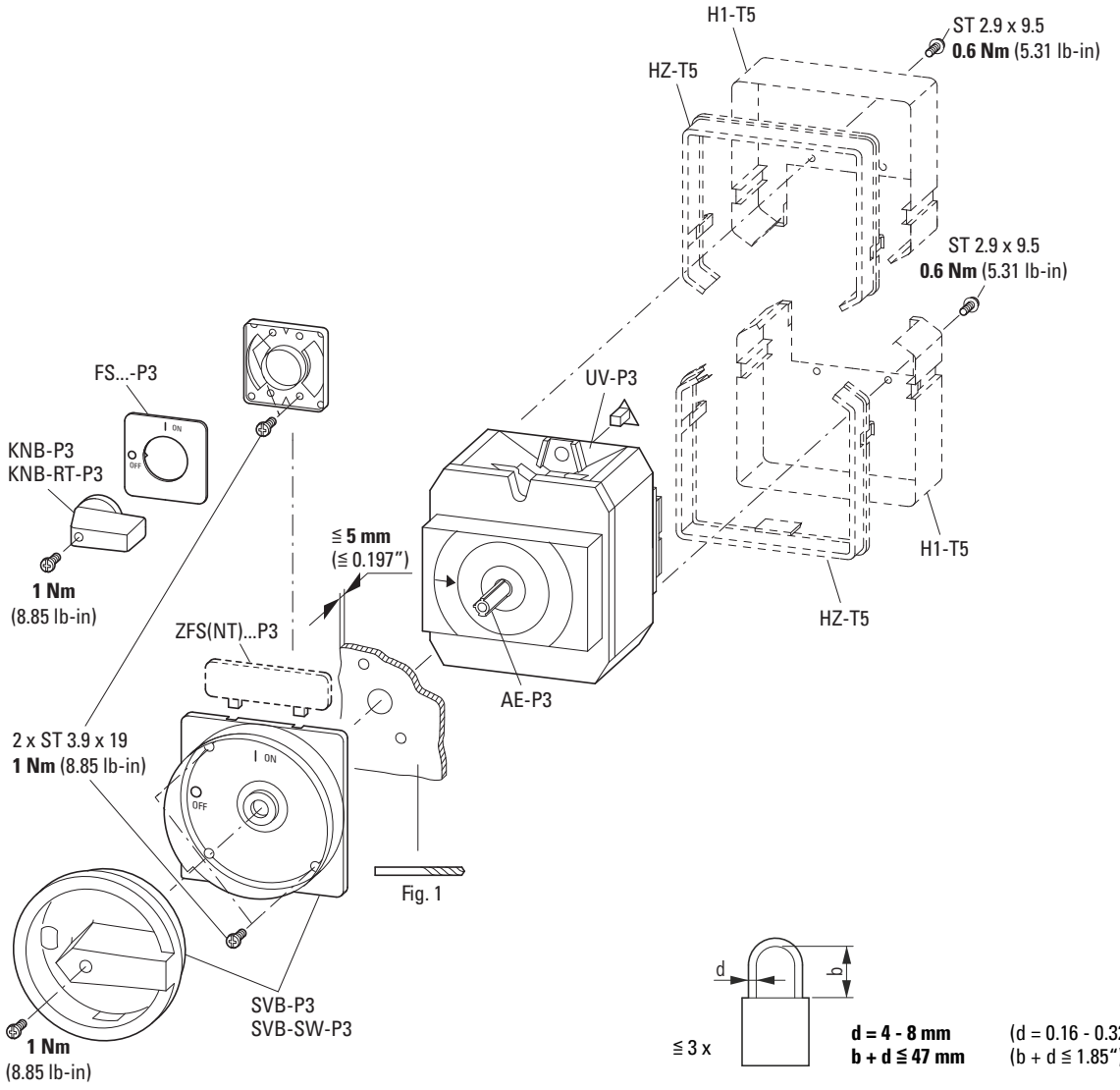

Components drawn in broken lines are not included in the scope of delivery.

T5(B)…/Z, T5(B)…/Z+SVB(-SW)-P3

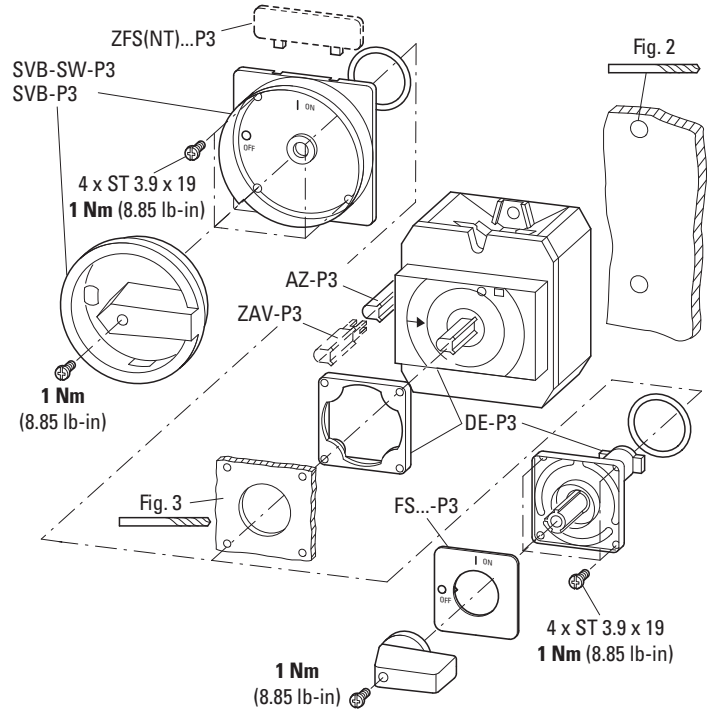

T5(B)…/V/SVB, T5(B)…/Z+V/EA/SVB(-SW)-T5

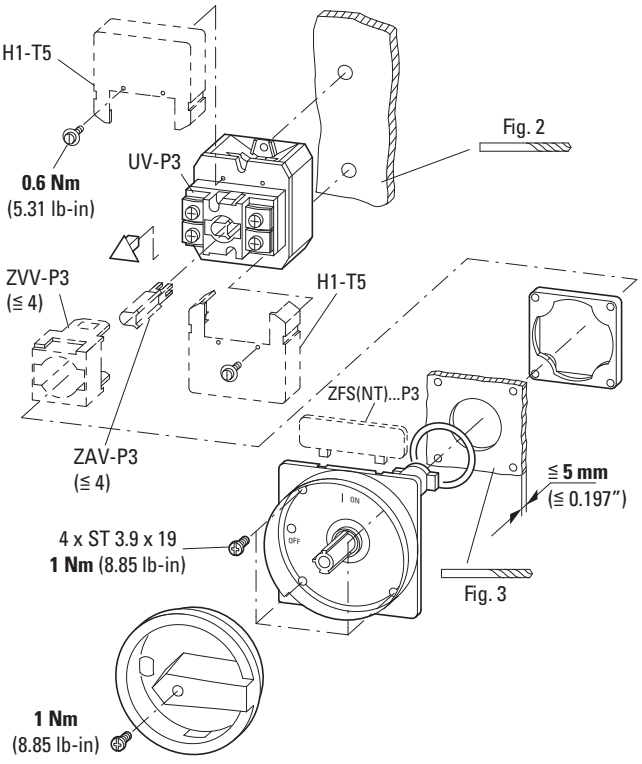

06/21 IL038010092Z

T5B…/I4(-RT)
T5B…/I4/SVB(-SW)

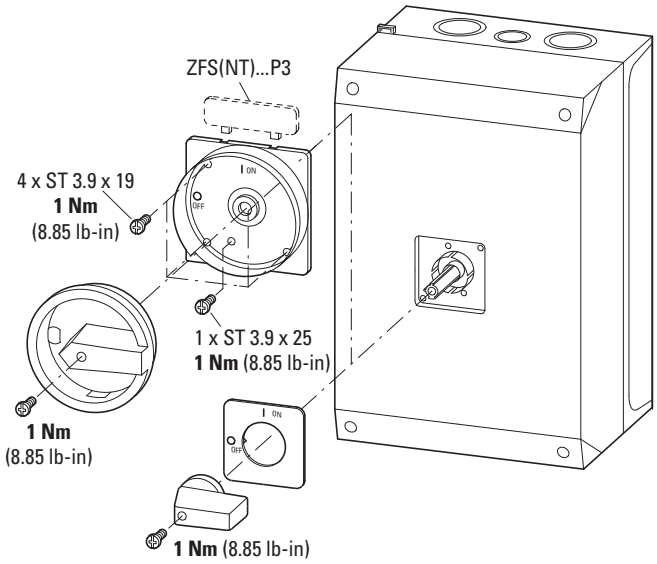

Components drawn in broken lines are not included in the scope of delivery.

T5…/I5(-RT)
T5…/I5/SVB(-SW)

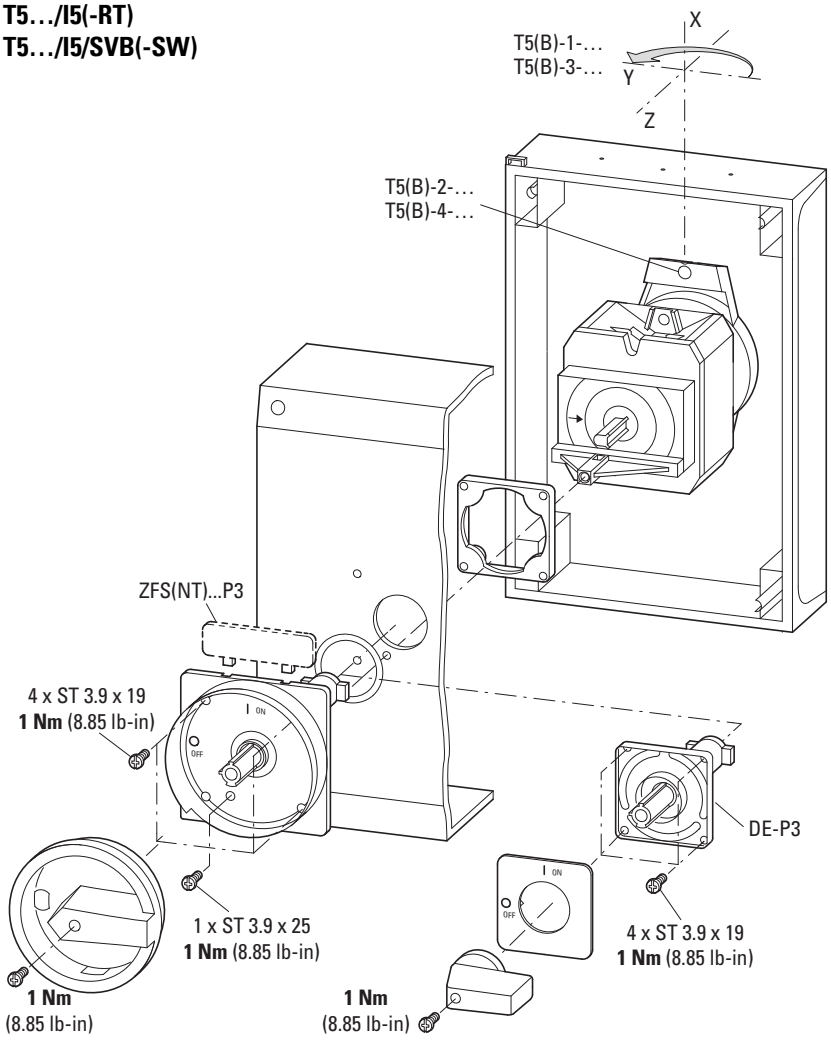

06/21 IL038010092

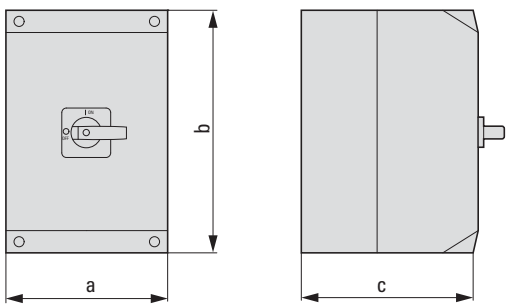

[mm]	T5B-1(2)	T5B-3(4)	T5-1(2)	T5-3(4)
a	160	160	200	200
b	240	240	280	280
c	95	160	125	160

[in]	T5B-1(2)	T5B-3(4)	T5-1(2)	T5-3(4)
a	6.29	6.29	7.87	7.87
b	9.45	9.45	11.02	11.02
c	3.74	6.29	4.92	6.29

SVB-SW-P3

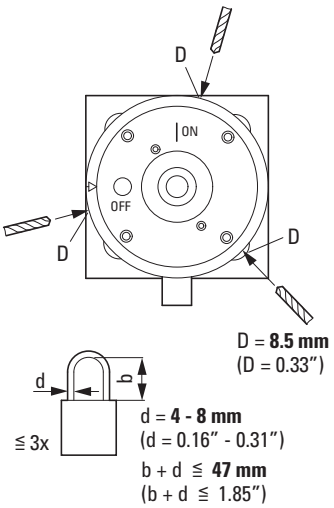

(en) DANGER
Only SVB-SW-P3: Lockable in ON position.
Locking the red-yellow switch in ON position is forbidden!

(de) GEFAHR
Nur SVB-SW-P3: In ON-Position abschließbar.
Abschließen in ON-Position bei rot-gelbem Schalter verboten!

(fr) DANGER
SVB-SW-P3 uniquement: cadenassable en position ON (fermé).
Cadenassage en position ON (fermé) interdit avec un appareil rouge-jaune !

(es) PELIGRO
Sólo SVB-SW-P3: Bloqueable en posición ON.
Bloquear un mando rojo/amarillo en posición ON está prohibido!

(it) PERICOLO
Solo per SVB-SW-P3: lucchettabile nella posizione ON.
È vietato lucchettare nella posizione ON l'interruttore con maniglia rosso-giallo!

(zh) 危险
只适用 SVB-SW-P3： 在打开位置可锁住。
当红黄色的开关在接通的状况时禁止锁闭。

(ru) ОПАСНО
Только SVB-SW-P3: Запираемый в позиции «ON»
При красно-желтом выключателе запрещается запирать в позиции «ON»!

(ar) خطر
SVB-SW-P3 فقط: قابل للقفل في وضع ON (التشغيل)
يُحظر قفل المفتاح الأحمر والأصفر في وضع ON (التشغيل)!

[mm]			[in]		
	T5B…/I4	T5…/I5		T5B…/I4	T5…/I5
x	142	182	x	5.59	7.17
y	193	233	y	7.59	9.17

→ **NOT 1 : 1**

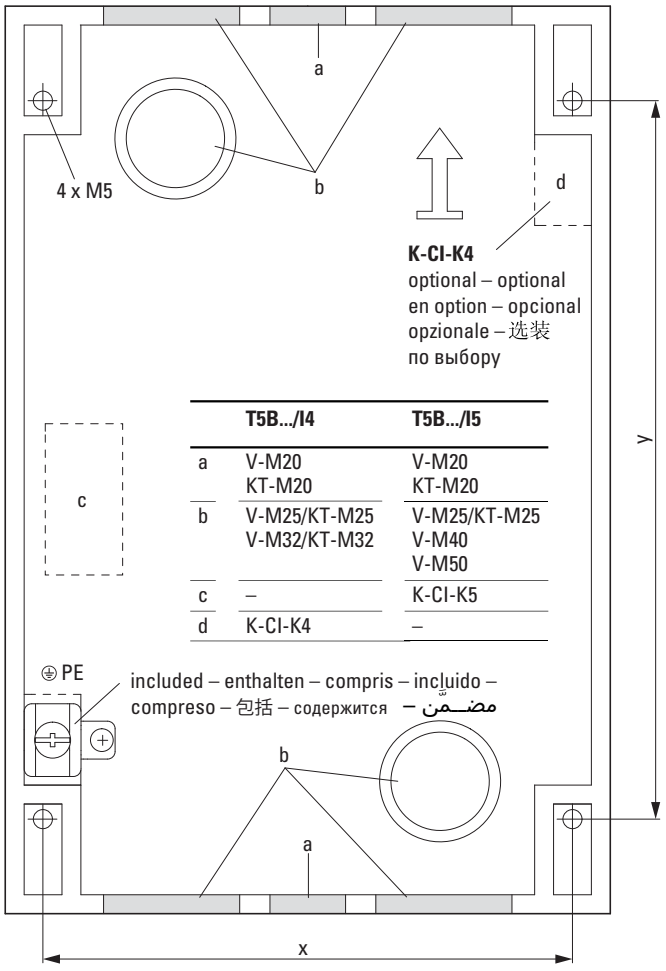

	T5B.../I4	T5B.../I5
a	V-M20 KT-M20	V-M20 KT-M20
b	V-M25/KT-M25 V-M32/KT-M32	V-M25/KT-M25 V-M40 V-M50
c	–	K-CI-K5
d	K-CI-K4	–

Fig. 2

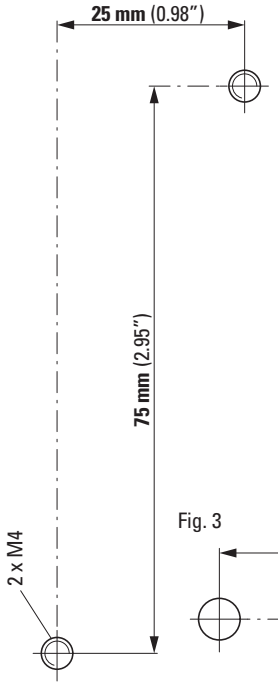

Fig. 1

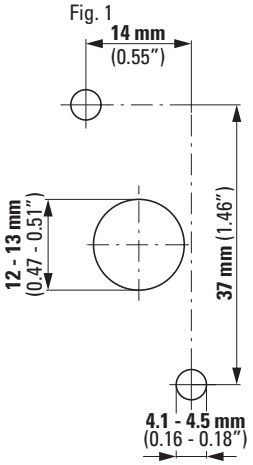

Fig. 3

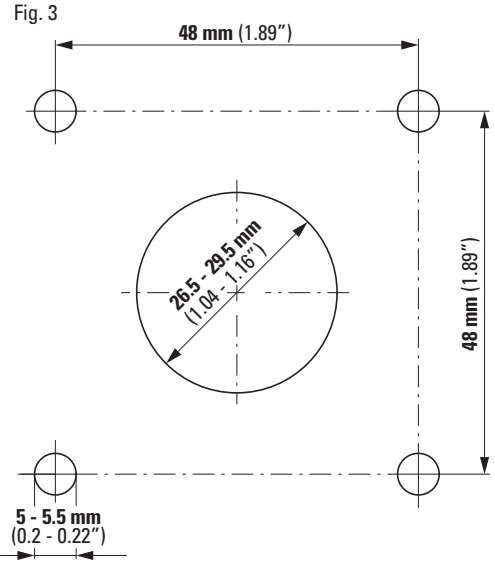

06/21 IL038010092

© 1999 Eaton Industries GmbH

EU: Eaton Industries GmbH, Hein-Moeller-Straße 7-11, 53115 Bonn, Germany
UK: Eaton Electrical Products Ltd, Melton Road, Burton-on-the-Wolds, Leicestershire, LE12 5TH, United Kingdom

Eaton.com/contacts
Eaton.com/aftersales
Eaton.com/documentation

06/21 IL03801009Z
Eaton.com/recycling