Part Number: **BU-23-***
Description: **Insulator for Heavy Duty Clip**

4106

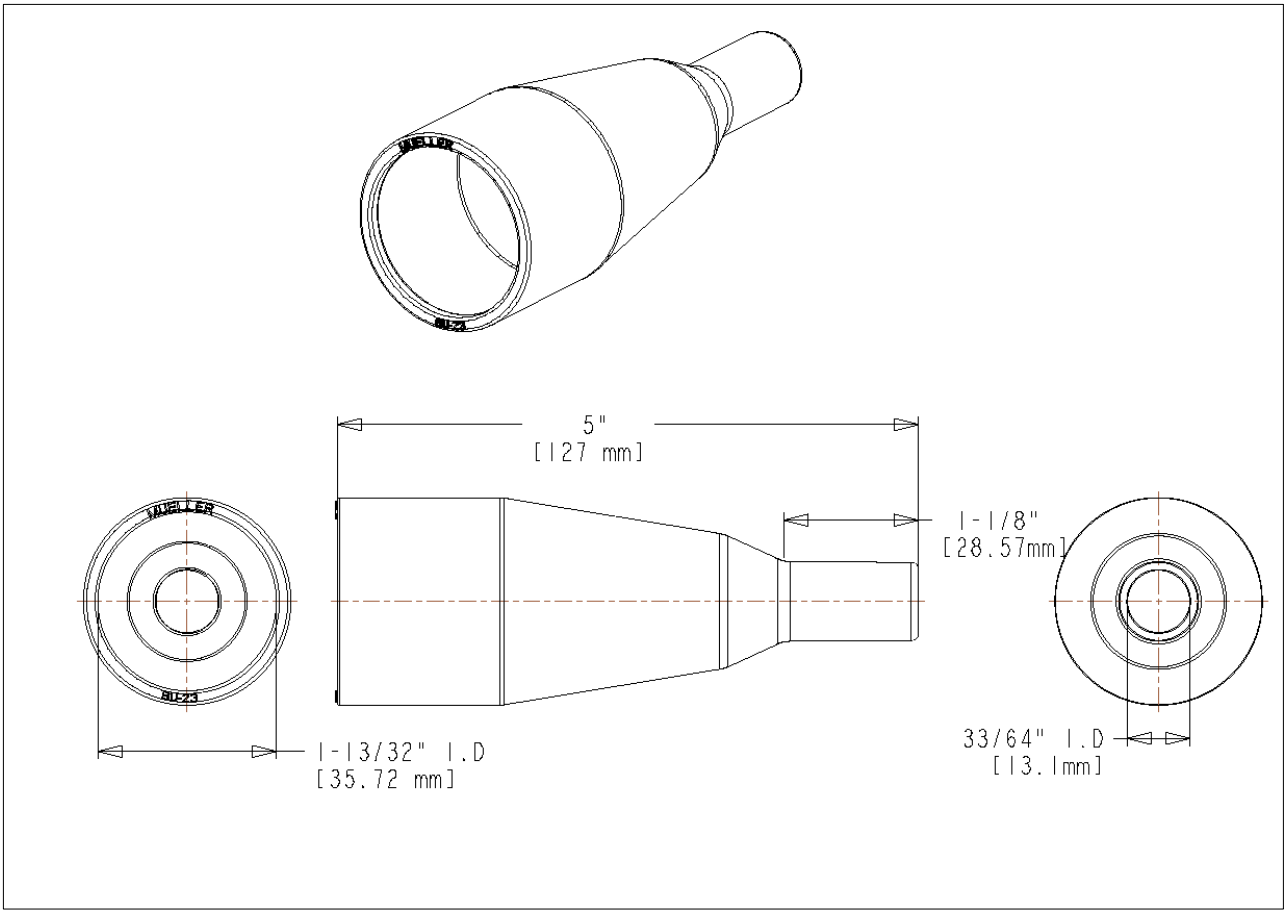

- Used to insulate clip from foreign objects
- Use with BU-21APN, BU-21APS, BU-21CPN and BU-21-CPS, series Clips
- Order as BU-23-*, where "*" is the number of the color shown below:
  0=black, 2 =red, 4=yellow, 5=green, 6=blue, 9=white
- Material: High Quality, durable PVC
- Packaged in Bulk
- RoHS Compliant

Mueller Electric Company
1625 E. 31st Street
Cleveland, Ohio 44114

ISO 9001:2000
Over 95 Years Of Innovation
www.muellerelectric.com

TEL. 800-955-2629
TEL. 216-771-5225
FAX. 216-771-3068